
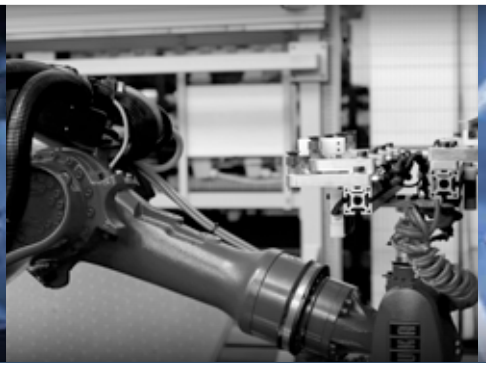




Galletti

AIR CONDITIONING

PRODUCT CATALOGUE 2015 / 2016

Galletti
AIR CONDITIONING

People and technology
The evolution of air conditioning.

Galletti Group:
a new approach to the market

A single partner offering diversified competences

The Galletti Group is the brainchild of a small pool of successful managers from the air conditioning industry.
Today it is made up of seven different companies which have specific competences in their respective target sectors and operate in close synergism so that they can present themselves as a single partner.

Vision

To become a key partner in the various HRVAC sectors, proposing integrated package of products designed on the basis of the customers' specific requirements, maximizing efficiency and energy savings.

Mission

Design and manufacture, internally at our facilities, products with high quality standards and a high level of reliability, integrating them with high value-added pre-sales and after-sales services.
Professionalism and passion are the qualities that have always distinguished our daily work.

Galletti

Within the Group, it is the company which specializes in comfort applications.
It boasts over 100 years of history and today presents itself on the market as a leading manufacturer in the realm of hydronic indoor units, chillers and heat pumps for the residential and tertiary sectors.

HiRef

A company that proposes solutions with a high technological content, present in the industrial and commercial air conditioning sector with a range of systems for data-processing centres and telecommunications and in the comfort sector with a range of highly customized units.

CETRA

It has been operating for decades in the field of air handling and offers a wide array of AHUs and heat recuperators for civil and industrial air conditioning.

ENEREN renewable energies

Service company specialized in energy audits. It is capable of offering complete, all-around packages in terms of services and products in the geothermal, photovoltaic and biomass sectors.

HiDew Dehumidifiers

Thanks to its solid know-how in the dehumidification sector, the company is specialized in the production of dehumidifiers combinable with residential radiant systems, industrial dehumidifiers and dehumidifiers for swimming pools.

TECNO REFRIGERATION

A company specialized in commercial and industrial refrigeration systems and which offers highly customized units for air conditioning and refrigeration in the transport sector.

GH Service

Company providing maintenance and technical support services and after-sales support for the products of the various Group companies

Specific competences in every sector





CONSULTING SERVICES:

- System integration with renewable energy sources
- Logic management for system components
- Choice of integrated solution
- Plant design assistance
- Energy audit

AFTER-SALES SERVICES:

- Maintenance
- Spare part management and sales
- Remote control systems
- Plant start-up
- Diagnostics



PRODUCT AND SERVICE 360°

DATA CENTER AND TELECOM AIR CONDITIONING



CRAC UNITS
3 - 240 kW



RACK COOLERS
3 - 52 kW



AIR CONDITIONERS
FOR TELECOM SHELTERS
4 - 38 kW

COMMERCIAL REFRIGERATION



MULTI-COMPRESSOR PLANTS
3 - 300 kW



CONDENSING UNITS
1 - 85 kW

SOFTWARE & HARDWARE

SOFTWARE
AND HARDWARE







ELECTRONIC CONTROLS

CHILLERS AND HEAT PUMPS



FREE-COOLING
50 - 1200 kW



AIR-WATER AND WATER-WATER
MULTIPURPOSE UNITS
4 - 420 kW



WATER-WATER
5 - 1400 kW

CONDENSERLESS
UNITS 40 - 480 kW



CONDENSING
UNITS 5 - 215 kW

AIR-WATER
4 - 1200 kW

270

300

330

The evolution of air conditioning

1930

Growth

Galletti became an enterprise with more than 100 employees, working sheet metal as a subcontractor.

1970

Fresh air

A new range of products for air conditioning. After the heating sector, Galletti achieved great success in the air-conditioning market with its Polar Warm fan coil unit.







1906

Establishment

Ugo Galletti opened a small iron works factory and workshop for repairing agricultural equipment in Castel Maggiore, a town located near Bologna.

1960

The boom years

Galletti ceased being a subcontractor and entered the heating market with its own brand.

Today

New goals.

For more than 30 years Galletti has been specialized in the manufacture of hydronic indoor units, chillers, and heat pumps, with specific expertise whose importance is recognized in the comfort air conditioning sector. The company's extensive experience, gained since the 1970s with more than 2,000,000 fan coil units sold, allows it to meet the new market demands while ensuring the highest level of quality and reliability. A network of qualified agencies, distributors and service centers guarantee support for the entire life of the product.

2000

The centennial

The company celebrated its 100th year, and under the leadership of its CEO Luca Galletti, it confirmed its position as a leader in the market for hydronic indoor units and chillers.



1990

Together

The Galletti Group was founded with the goal of employing specific expertise to cover all the sectors of HVACR (heating, ventilation, air conditioning and refrigeration).

2015

The Group

Today the group comprises of seven companies in the HVACR sector and eight production facilities, with a total of more than 450 employees.

Three strategic processes

The great strength of Galletti, as well as of all the other Group companies, is that of continuing to maintain internally **the 3 strategic processes** which are the pillars of every new solution.

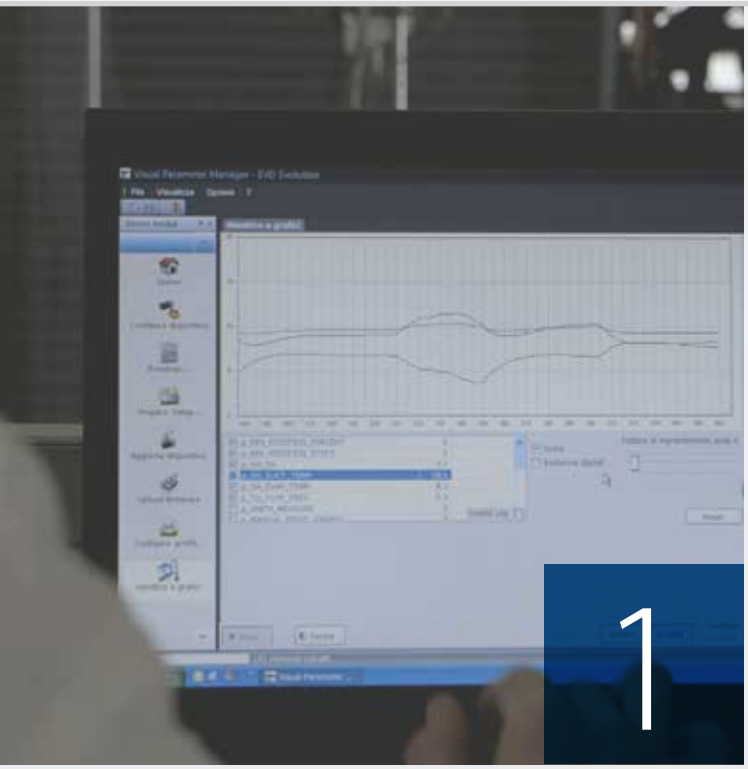

Research and development

The market requires products that are increasingly on the cutting edge for quality, performance, and energy efficiency.
In order to satisfy this demand, Galletti has been relying for decades on a modern in-house R&D department. This department is a vital part of the company; it works in close cooperation with Production and Quality Control to guarantee a product that has been studied in the smallest detail.

The constant desire to improve the product is matched by the need to refine the research and development techniques.

The company possesses a calorimetric chamber for the hydronic indoor units and a climatic chamber for the chillers, and it is one of the few companies in Italy to possess a reverberation chamber for measuring true sound levels.

Design

That which is developed, conceived, and analyzed in the R&D Department then takes shape in the Engineering Department, which handles the mechanical and electrical design of the hydronic indoor units, chillers, and heat pumps.

The Engineering Department's dedicated team handles the development of software and hardware solutions; unlike their competitors, this activity allows the company to make proposals to the market that are open to its customers' requirements.





Vertical production

The automated sheet metal work centre is a cutting-edge production unit made up of a system which integrates an automatic magazine, a robot for bending small parts and punch and bending stations.

This latest generation system represents a clear example of what the concept of "verticalization" means for Galletti: galletti's important expertise, together with its considerable production flexibility, are the result of not only experience, but also of the ability to internalize strategic processes such as working sheet metal.
To this must be added the management of two other important types of processing: the in-house production of heat exchangers and the in-house development of adjustment hardware and software.

The approach of developing, designing, and producing in-house semi-finished products, components, and finished products strengthens Galletti's ability to be flexible regarding its customers' requirements and gives Galletti a large competitive advantage over the other players in the market.

Galletti can boast a unique achievement: **a completely integrated work centre.**



SOFTWARE FOR CALCULATING THE SEASONAL PERFORMANCE of a Heat pump

Recent developments in legislation promote energy efficiency and environmental sustainability in the design of equipment and installations, both in the civil and industrial realms.
In response to the new legislative constraints, Galletti S.p.A., in collaboration with the University of Bologna, has developed an innovative software application called SENECA for analysing the seasonal energy performance of heat pump systems.
The average seasonal parameters (SCOP, SEER) are calculated by SENECA based on design specifications such as the local climate profile, thermo-physical performance of the building shell and whether an auxiliary generation system has been installed.

SENECA: OUTPUT USEFUL FOR DESIGN PURPOSES

The SENECA calculator program simulates the operation of heat pump systems over the 12 months of the year based on project specifications. The main results calculated by SENECA are:

- seasonal energy efficiency of the generation system, which also takes into account the possible presence of an auxiliary system (heating element, fossil fuel fired boiler)
- seasonal consumption of the generation system, estimating the contribution deriving from a photovoltaic system serving the heat pump
- percentage of renewable energy used by the heat pump
- suggestion of the most efficient machine based on the design specifications
- energy and cost comparison of heat pumps with traditional generation systems
- determination of the optimal cut-off T for bivalent systems
- seasonal CO_2 emissions ascribable to the generation system

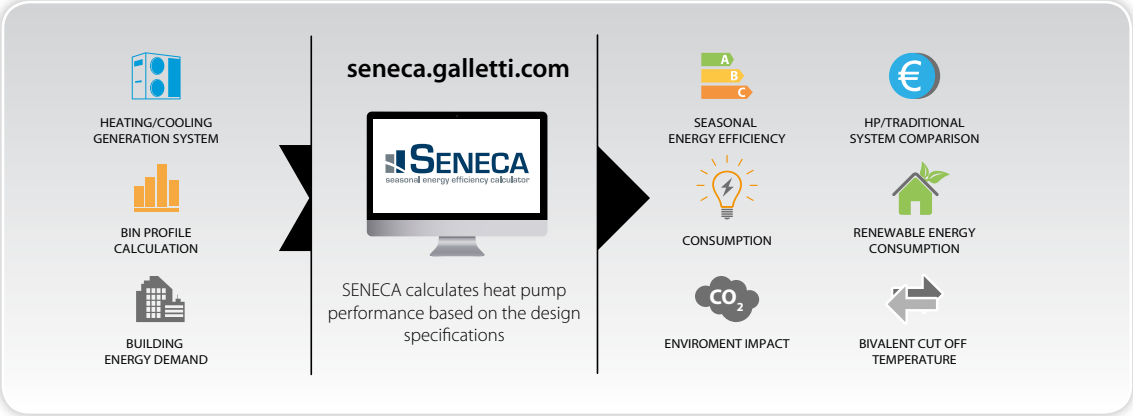



AFTER-SALES SERVICE

- Routine and special maintenance
- Management and sales of spare parts
- Telephone customer support systems
- System start-up
- Trouble shooting



Service

Galletti has always considered service to be of fundamental importance in order to provide an all-around range of offerings to its customers. For this reason it created GH Service as the Group's specialized service provider. GH Service is equipped and competent to service all types of air conditioning units, whether designed for the comfort or tertiary sectors, for processing machinery or technological environments, air handling units or highly customized units, its primary aim being customer satisfaction.

Continual interaction with all Group companies enables GH Service to be always up to date about equipment innovations, so it can guarantee its customers not only technologically advanced, high quality products but also a rapid, efficient and professional after-sales service.
GH Service is at the customer's disposal from the design stage to the after-sales period; it operates through an extensive network of service centres in Italy, which provide support to the numerous sales agents and distributors in Italy and around the world.

The company's internal and outsourced staff are highly qualified, have long-time technical experience and are kept constantly up to date through specific refresher training courses. Its specialized technicians are in possession of all necessary certifications for operating on refrigeration cycle units and are equipped with cutting-edge tools.

GH Service also set ups ad hoc warranty extension packages and routine and extraordinary maintenance programs, as well as supplying spare parts and offering units on a rental basis.

In a market where selling a product is no longer enough, thanks to GH Service Galletti can present itself as a partner capable of providing a complete package of products and services.









CERTIFICATIONS

Galletti started out on the road to certification in 1994, the year in which the company entered the Eurovent program for fan coils, later followed by chillers and heat pumps.

The certification process continued up to 2000, when Galletti obtained certification of its quality system to standard UNI EN ISO 9002:1994; it subsequently obtained certification to UNI EN ISO 9001:2000.

A continuous improvement of company processes characterized the years to come, culminating in compliance with Directive 97/23/EC (PED), the upgrading of its occupational health and safety system according to OHSAS 18001:2007, and, finally in the updating to the new standard UNI EN ISO 9001:2008.





DIRECTIVE ErP 2009/125/EC

The first time horizon the European Union is setting its sights on in respect of climate and energy is 2020: it has identified new binding targets for Member States, which can be summed up in three precise goals:

-20%



CO_2 EMISSIONS

To reduce greenhouse gas emissions resulting from energy consumption by 20% compared to 1990 levels.

+20%



RENEWABLES

To reach a percentage of 20% of energy from renewable sources out of the total energy consumed

-20%



ENERGY CONSUMPTION

To reduce final energy consumption by 20% relative to the projections for 2020

To achieve these goals, the EU has adopted the ErP Directive 2009/125/CE (Energy-related Products), which regulates the eco-design requirements for all energy-using products.
Many years ago the EU launched a study to determine the minimum mandatory efficiency requirements for some groups of products sold within the European Community, including electric motors.

Directive 2009/125/EC involves the following items included in the Galletti catalogue:

- ✔ fan drive assemblies for fan coil units and fan heaters
- ✔ electric fans, electric pumps with base frames and circulators used in chillers and heat pumps
- ✔ finished products (indoor units, chillers and heat pumps)

Considering that 2015 has seen the entry in force of efficiency limits even more stringent than those previously applied, the ErP Directive involves and strongly influences the design of all Galletti products, further stimulating the continuous quest for excellence in terms of performance and reduction of the environmental impact.
Compliance with the regulation is not a classification of merit or an efficiency class, but rather an indispensable requirement for CE marking, without which the product cannot be placed on the EC market. The ErP Directive is mandatory for all EU countries.

Hydronic indoor units



ESTRO pag. 22
Fan coil units with centrifugal fan
1 - 11 kW



ESTRO i pag. 36
Fan coil units with centrifugal fan and BLDC motor
1 - 9 kW



ESTRO GT pag. 48
Fan coil units with centrifugal fan and BLDC GreenTech technology
1 - 6 kW



FLAT pag. 58
Design fan coil units with centrifugal fan
2 - 5 kW



FLAT i pag. 62
Design fan coil unit with centrifugal fan and BLDC motor
2 - 5 kW



FM pag. 66
High wall-mounted fan coil units
2 - 4 kW



2x1 pag. 70
Hybrid indoor units for air conditioning system
1 - 3 kW



KAIMAN pag. 74
Hydronic indoor unit operating with natural convection
1 - 2 kW



IWC pag. 76
Cassette fan coils
3 - 10 kW



IWC i pag. 82
Cassette fan coils with BLDC motor
3 - 5 kW

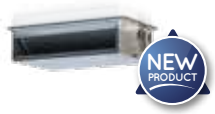

DUCTIMAX pag. 86
Medium available static pressure ducted hydronic units
2 - 8 kW

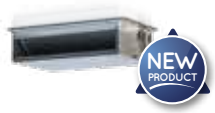

DUCTIMAX i pag. 92
Medium available static pressure ducted hydronic units with BLDC motor
2 - 8 kW

Hydronic indoor units



PWN pag. 98
Medium available static pressure ducted hydronic units
3 - 10 kW



PWN i pag. 102
Medium available static pressure ducted hydronic units with BLDC motor
2 - 6 kW



UTN pag. 106
High available static pressure ducted hydronic units
3 - 23 kW



UTN i pag. 112
High available static pressure ducted hydronic units with BLDC motor
4 - 10 kW

Fan heaters



AREO pag. 118
Fan heaters
8 - 101 kW



AREO i pag. 124
Air conditioning fan heaters with BLDC motor
14 - 118 kW



DST pag. 128
Air destratifiers
1700 - 9100 m³/h

Controllers and software for indoor hydronic units



MYCOMFORT pag. 134
Electronic microprocessor controller with LCD display



EVO pag. 136
Electronic microprocessor controller with remote user interface



ERGO pag. 138
Supervision software for air conditioning systems



LED503 pag. 140
Recess wall-mounted control panel

Air/water chillers and heat pumps



MPI DC pag. 146
Outdoor packaged unit with BLDC compressor
8 - 29 kW



MPE pag. 152
Outdoor packaged unit
4 - 76 kW



SCX pag. 164
Outdoor packaged unit
80 - 360 kW



LCX pag. 174
Outdoor packaged unit
40 - 360 kW



LSE pag. 196
Outdoor packaged unit
360 - 1200 kW



MTE pag. 208
Outdoor motor-driven condensing units
5 - 205 kW



LER pag. 218
Indoor motor-driven evaporating units
40 - 420 kW



MCC pag. 228
Indoor air/water chiller and heat pumps for ducted installation
5 - 37 kW

Water/water chillers and heat pumps



MCW pag. 242
Indoor packaged unit
5 - 39 kW



LEW pag. 248
Indoor packaged unit
40 - 680 kW

Total heat recovery multi-purpose heat pumps



HIWARM pag. 268
Air/water split-system with BLDC inverter compressor
12 - 33 kW



HIWARM COMPACT pag. 276
Outdoor packaged air-water unit with BLDC compressor
10 - 29 kW



MCP pag. 282
Outdoor packaged air-water unit
7 - 41 kW



LCP pag. 292
Outdoor packaged air-water unit
52 - 314 kW



LEP pag. 310
Indoor packaged water-water unit
50 - 470 kW

Integrated system solutions and controllers



DHW KIT pag. 328
Integrated DHW production system kit for heat pumps



EVO SYSTEM pag. 330
Electronic microprocessor controller for integrated system management



RYT pag. 332
Thermal storage tank for the production of domestic hot water
300 - 800 l

Galletti
AIR CONDITIONING



HYDRONIC INDOOR UNITS

Introduction	p. 20
ESTRO	p. 22
ESTRO i	p. 36
ESTRO GT	p. 48
FLAT	p. 58
FLAT i	p. 62
FM	p. 66
2x1	p. 70
KAIMAN	p. 74
IWC	p. 76
IWC i	p. 82
DUCTIMAX	p. 86
DUCTIMAX i	p. 92
PWN	p. 98
PWN i	p. 102
UTN	p. 106
UTN i	p. 112



HYDRONIC INDOOR UNITS



Wide range with over 1000 options!

It's 1961 and Galletti with its Jolly copper radiating plate enters the air conditioning world! More than half a century has gone by since then, there have been changes in the types of system and their intended use, markets and consumer demands grow and Galletti is still among the leaders in this sector.
The target is to come up with the most comprehensive range of solutions for indoor hydronic units with technologies and designs that, abreast with engineering evolution, have upgraded with the precise intention of combining reliability and innovation.
Today the offerings are completed with fan coil units with centrifugal or tangential fan, hybrid units specifically designed for residential applications, cassette units with axial-centrifugal fan, medium- and high-head ducted units and - in homage to tradition - convection heating models.



Energy savings with inverter-controlled BLDC motors

in the air conditioning sector there is by now a well-established trend toward the offering of solutions that combine performance and low energy consumption.
In line with its objective of continual innovation, Galletti offers solutions with brushless motors which guarantee:

- comfort of use thanks to the complete modulation of the air flow
- about 50% operating costs saving compared to the conventional motors
- the temperature setpoint in the air conditioned rooms is reached quickly
- the power delivered is constantly adjusted according to the actual load conditions
- exceptionally quiet operation at low speed, as in night-time mode



Design and materials

On its hydronic indoor units Galletti uses cabinets with an exclusive design, ideal for both residential and commercial settings.
The quality of the materials used for their construction assures that they fully retain their characteristics over time.
The plastic parts are made of UV-stabilized ABS to maintain their colour intact over time.
The steel parts consist of 10/10 mm sheet with a double layer of paint, UV resistance class RUV 3 according to standard EN 10169-2 .

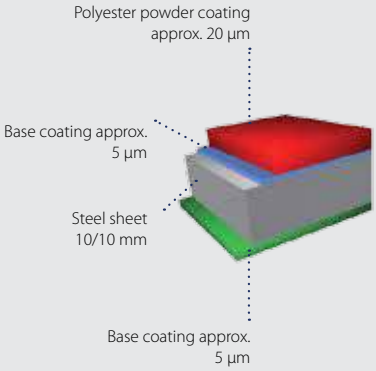



Quiet operation

The design of all the ventilation components of Galletti indoor units is developed exclusively by the company's engineering staff, backed by research and development facilities and over 50 years of specific know-how.
More specifically, the most recent studies on materials and aerodynamic profiles have led to the development of special fans and scrolls conceived to ensure performances in terms of quiet operation that are among the best in Europe and Eurovent certified, combined with a correct distribution of air, which assures maximum interior comfort in any operating mode.



Efficient climate control

Galletti offers a wide range of on board or wall mounted controllers comprising more than 20 options according adjustment degree and comfort required.
Design and technology are combined in the latest-generation LED or LCD controllers: MYCOMFORT, LED503 and EVO, which represent the state of the art in intelligent control of an indoor unit connected to a chiller or heat pump.
Management systems, master/slave options, auto adaptive adjustment of chiller/water pump, control of room humidity are only some of the salient features of qualified and reliable offerings.

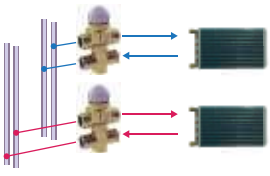

STANDARD SYSTEM
4-pipe systems and 2 rows

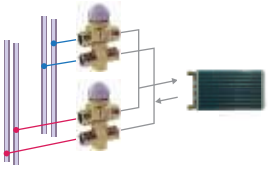

4X2 FAN COIL VALVE KIT
4-pipe systems and 1 row

4X2 VALVES

Innovative concept for 4 pipe systems The 4X2 valves are designed for four pipe fan coil systems where "hot" and "cold" circuits are completely separated, though using the same heat exchanger mounted on the fan coil.

Considerable enhancement of performance in wintertime = **Possibility of operating with lower water temperatures** = **Energy saving**

Fan coil units with centrifugal fan

ESTRO 1 - 11 kW





ERGO Supervision | 2-pipe system | 4-pipe system | Vertical installation | Horizontal installation | Centrifugal fan

PLUS

- 3 or 6-speed motors
- ABS centrifugal fans
- Can be integrated into the ERGO
- Heat exchanger up to 4 rows
- Reversible water connections
- Steel/ABS cabinet
- Incorporable ioniser

The most complete range of fan coil units on the market featuring the Galletti technology, quality level and reliability.

The ESTRO series is undoubtedly the line of fan coil units with the most complete range of models and accessories that are able to meet the needs of professionals in the field.
The range consists of 20 models in 9 versions.
For the ESTRO project we selected top quality materials which, together with the great care and attention dedicated to the assembly of the main constructive components, make the ESTRO fan coil units highly reliable from a performance standpoint while minimising noise levels.
The conception underlying its construction makes it possible to combine models for vertical and horizontal installation: models for surface mounting on walls, floors/ceilings and recess mounting in walls/ceilings plus low body model for floor installation.
In its recess-mounted ductable version, ESTRO has a number of accessories that permit quick and economical installation with flexible ducts directly coupled with air diffusion grilles.
ESTRO can be combined with a range of on-board or wall-mounted control panels consisting of 20 options, depending on the level of comfort and adjustment required.
An innovative air ionization system ensures the sanitization of the indoor unit and the deodorization of the ambient air.





AVAILABLE VERSIONS



ESTRO FL
Version with cabinet, suitable for wall mounting.
Vertical air flow, filter on the air intake securely attached to the cabinet with quarter-turn screws.
ESTRO FL is available in 20 models.



ESTRO FA
Wall mounted with cabinet.
The inclined front air flow makes the ESTRO FA version especially suited for installation in recesses up to a depth of 150 mm.
ESTRO FA is available in 19 models.



ESTRO CL
Wall mounted with cabinet, vertical air flow.
Designed with a range of pastel shades, it combines well with traditional furnishings and all architectures in which the warm colours and elegant shapes make ESTRO CL a perfect interior design accessory.
Steel sheet panel colour: RAL 9001. ABS parts colour: PANTONE "warm gray 2 U"
ESTRO CL is available in 20 models.



ESTRO FU
Version with cabinet, suitable for floor and ceiling mounting.
The cabinet has air outlet grilles and air intake grilles with built-in filter.
ESTRO FU is available in 20 models.



ESTRO FP
Version with cabinet, suitable for ceiling mounting. The air intake is located behind the air outlet grilles. This version is especially suitable if combining with external air intake louvers.
ESTRO FP is available in 20 models.



ESTRO FB
Low-cabinet version, suitable for floor and ceiling mounting.
The cabinet has air outlet grilles and air intake grilles with built-in filter.
Rearranging the internal components has made it possible to reduce its height to just 438 mm.
ESTRO FB is available in 9 models.



ESTRO FC
Model for vertical and horizontal recess mounting, air intake in line with the outlet, thermally insulated galvanised sheet steel body.
Plenum and connectors complete the air intake and the air flow into the room.
ESTRO FC is available in 20 models.



ESTRO FF
Model for vertical and horizontal recess mounting, front air intake, thermally insulated galvanised sheet steel body.
The front air intake allows horizontal or floor recessed installation with direct intake from the false-ceiling.
ESTRO FF is available in 20 models.



ESTRO FBC
Low-cabinet version for vertical and horizontal recess mounting, front air intake with air filter, thermally insulated galvanised sheet steel body.
Rearranging the strategic components has made it possible to reduce its height to just 412 mm.
ESTRO FBC is available in 9 models.

MAIN COMPONENTS

Cabinet

Composed of a painted steel sheet panel, side panels, air outlet grille (swinging by 180°) and back suction grille built from ABS.
Round shapes and colours that can satisfy all interior decorating needs, in line with architectural requirements.



Structure

Built from galvanised steel sheet of extra thickness, heat and sound insulated by means of Class 1 self-extinguishing panels. FU, FB, FC, FF and FBC versions have a double drip tray for collecting condensate.

Heat exchanger

High efficiency heat exchanger made with copper piping and aluminium fins, provided with brass manifolds and vent valve. The water connections are reversible at the time of installation. On request it is possible to mount an additional heat exchanger for 4-pipe systems.

Electric motor

It is mounted on vibration dampers, with permanently activated capacitor and thermal protection of the windings, and is directly coupled with the fans. It is available as either a 3- or 6-speed version in order to meet all the specific needs of performance, quietness, and power consumption.

Fans

Double suction centrifugal fans, statically and dynamically balanced, manufactured from anti-static ABS, with blades having an airfoil section and offset modules. The fans are housed in a low-noise ABS volute with high-efficiency profile.



Air filter

Honey-comb polypropylene washable air filter, easily removable for maintenance operations. On FU and FB versions the air filters are fitted onto the air inlet grille.

ACCESSORIES

Electromechanical control panels	
CB	On-board speed switch
TB	On-board speed switch and thermostat
TIB	On-board speed switch, thermostat and summer/winter selecting switch
TC	Thermostat for minimum water temperature in the heating mode (42°C) for controllers
CD	Recess wall-mounted speed selector
CDE	Wall-mounted speed selector
TD	Wall-mounted speed selector, thermostat and summer/winter selecting switch
TDC	Wall-mounted speed selector and thermostat
TD4T	Wall-mounted speed selector, thermostat and summer/winter selecting switch, for controlling fan and valves
TA	Wall-mounted room thermostat
TA2	Room thermostat with summer/winter selecting switch, wall mounting

Wall-mounted microprocessor electronic control panels	
MCBE	MYCOMFORT BASE electronic controller with display
MCME	MYCOMFORT MEDIUM electronic controller with display
MCLE	MYCOMFORT LARGE electronic controller with display
KBE	MYCOMFORT on-board installation kit
DIST	MYCOMFORT controller spacer for wall mounting
MCSWE	Water sensor for EVO, MYCOMFORT and LED503 controller
MCSUE	Humidity sensor for EVO, MYCOMFORT MEDIUM and LARGE controller
EVODISP	EVO CLOCK Remote display
EVOBOARD	EVO 230V circuit board
LED503	LED503 Recess wall-mounted electronic controller with display
KL	LED503 on-board installation KIT for ESTRO









ACCESSORIES

Power interface and regulating louver controllers	
KP	Power interface for connecting in parallel up to 4 fan coils to one controller
CSB	On-board controller for opening and closing the motor-driven regulating louver
CSD	Recess mounted controller for opening and closing the SM motor-driven regulating louver
Additional heat exchanger for 4-pipe systems	
DF	1-row additional heat exchanger for 4-pipe systems (not suitable for "M" models)
Auxiliary water drip trays, insulating shell, condensate drainage pump	
BV	Auxiliary water drip tray for vertical installation fan coil units
BH	Auxiliary water drip tray for horizontal installation fan coil units
GIVKR	Insulating shell for VK1S valve, water connections on the right
GIVKL	Insulating shell for VK1S valve, water connections on the left
KSC	Condensate drain kit
Support and covering elements	
ZL	Pair of support covering elements for Estro FL
ZLG	Pair of support covering elements with front grille for Estro FL
ZA	Pair of support covering elements for Estro FA
ZAG	Pair of support covering elements with front grille for Estro FA
ZC	Pair of support covering elements for Estro CL
ZCG	Pair of support covering elements with front grille for Estro CL
D	Supports for Estro FC
Rear covering panels	
PV	Painted rear panel for vertical installation models with cabinet
PH	Painted rear panel for horizontal installation models with cabinet
Electrical heating elements	
RE	Heating element with installation kit, relay box and safety devices
Grilles	
GE+C	Aluminium external air intake grille, with subframe
GEF+C	Aluminium external air intake grille, with subframe and air filter
GM+C	Aluminium air outlet grille with 2-row fins and subframe
RGC	Plenum with circular collars for air outlet grille
Grilles	
GE+C	Aluminium external air intake grille, with subframe
GEF+C	Aluminium external air intake grille, with subframe and air filter
GM+C	Aluminium air outlet grille with 2-row fins and subframe
RGC	Plenum with circular collars for air outlet grille

Plenum and connectors	
RM90	Angular outlet connector
RM90C	Angular outlet insulated connector
RMD	Straight outlet connector
RMCD	Straight outlet insulated connector
RA90	Angular inlet connector
RAD	Straight inlet connector
RMCD C	Air outlet plenum with circular collars
RAD C	Air inlet plenum with circular collars
External air intake louvers	
S	Manual external air intake louver
SM	Motor-driven louver, with motor on the right with transformer
	Motor driven louver, with motor on the left, with transformer
SMC	Motor driven louver, with motor on the right, for centralised control
	Motor driven louver, with motor on the left, for centralised control
Valves	
VK	3-way valve, 230V actuator, hydraulic kit for standard heat exchanger
	3-way valve, 230V actuator, hydraulic kit for DF heat exchanger
	3-way valve, 24V actuator, hydraulic kit for standard heat exchanger
	3-way valve, 24V actuator, hydraulic kit for DF heat exchanger
VKM	3-way valve, modulating actuator, hydraulic kit for standard heat exchanger
	3-way valve, modulating actuator, hydraulic kit for DF heat exchanger
VK	3-way valve, 230V actuator, hydraulic kit on heat exchanger side for standard heat exchanger
	3-way valve, 230V actuator, hydraulic kit on heat exchanger side for DF heat exchanger
	3-way valve, 24V actuator, hydraulic kit on heat exchanger side for standard heat exchanger
	3-way valve, 24V actuator, hydraulic kit on heat exchanger side for DF heat exchanger
VKM	3-way valve, modulating actuator, hydraulic kit on heat exchanger side for standard heat exchanger
	3-way valve, modulating actuator, hydraulic kit on heat exchanger side for DF heat exchanger
KV	2-way valve, 230V actuator, hydraulic kit on water connection side for standard heat exchanger
	2-way valve, 230V actuators, hydraulic kit on water connection side for standard and DF heat exchanger
	2-way valve, 24V actuator, hydraulic kit on water connection side for standard heat exchanger
	2-way valve, 24V actuator, hydraulic kit on water connection side for standard and DF heat exchanger
KVM	2-way valve, modulating actuator, hydraulic kit on water connection side for standard heat exchanger
	2-way valve, modulating actuators, hydraulic kit on water connection side for standard and DF heat exchanger

Rated technical data

ESTRO		1			2			3			4		
Fan speed		min	med	max	min	med	max	min	med	max	min	med	max
Total cooling capacity (1) (E)	kW	0,77	0,92	1,15	1,04	1,24	1,54	1,26	1,52	1,74	1,36	1,70	1,96
Sensible cooling capacity (1) (E)	kW	0,59	0,70	0,87	0,79	0,97	1,20	0,95	1,14	1,30	1,00	1,24	1,42
Water flow(1)	l/h	133	158	198	180	213	263	216	260	299	234	292	338
Water pressure drop (1) (E)	kPa	4	5	7	7	9	13	8	11	14	6	10	13
Heating capacity (2) (E)	kW	1,11	1,30	1,55	1,43	1,73	2,14	1,71	2,04	2,20	1,79	2,18	2,57
Water pressure drop (2) (E)	kPa	3	4	6	6	8	11	7	9	12	5	8	11
Heating capacity (3)	kW	1,94	2,27	2,68	2,47	2,99	3,71	2,93	3,50	3,74	3,04	3,67	4,35
Water flow (3)	l/h	170	198	234	216	263	324	259	306	328	267	324	382
Water pressure drop (3)	kPa	4	6	8	7	10	15	8	11	13	6	8	11
Air flow	m^3/h	149	189	231	178	233	319	211	271	344	211	271	344
Power input (E)	W	18	21	32	21	28	37	25	36	53	24	36	53
Sound power level (4) (E)	dB/A	30	32	40	37	42	47	38	44	49	40	44	50
Additional coil heating capacity (3) (E)	kW	1,35	1,50	1,70	1,50	1,70	1,90	1,56	1,78	2,02	1,56	1,78	2,01
Water flow (3)	l/h	118	132	151	133	148	166	137	155	176	137	154	177
Water pressure drop (3) (E)	kPa	3	4	4	4	5	6	5	7	8	6	8	11

ESTRO		4M			5			6			6M		
Fan speed		min	med	max	min	med	max	min	med	max	min	med	max
Total cooling capacity (1) (E)	kW	1,50	1,85	2,24	1,60	2,03	2,42	1,76	2,38	2,93	1,93	2,64	3,29
Sensible cooling capacity (1) (E)	kW	1,06	1,32	1,60	1,18	1,57	1,88	1,26	1,70	2,11	1,33	1,83	2,30
Water flow(1)	l/h	260	317	385	374	349	414	302	408	503	331	453	565
Water pressure drop (1) (E)	kPa	10	14	20	8	12	16	5	8	11	7	12	17
Heating capacity (2) (E)	kW	1,83	2,26	2,74	2,07	2,68	3,20	2,28	2,83	3,50	2,33	3,21	4,04
Water pressure drop (2) (E)	kPa	8	11	16	6	10	13	4	6	13	6	10	14
Heating capacity (3)	kW	3,08	3,80	4,62	3,52	4,57	5,40	3,86	5,22	6,46	3,91	5,39	6,79
Water flow (3)	l/h	270	335	403	310	400	479	339	458	567	343	473	595
Water pressure drop (3)	kPa	8	12	16	7	12	16	4	7	11	6	10	14
Air flow	m^3/h	211	271	344	241	341	442	241	341	442	241	341	442
Power input (E)	W	24	36	53	29	44	57	29	43	56	29	43	56
Sound power level (4) (E)	dB/A	41	45	51	35	43	48	35	42	48	34	42	48
Additional coil heating capacity (3) (E)	kW	not available			2,06	2,53	2,92	2,18	2,68	3,08	not available		
Water flow (3)	l/h	not available			180	223	256	191	235	270	not available		
Water pressure drop (3) (E)	kPa	not available			2	3	4	3	4	5	not available		

ESTRO		7			7M			8			8M		
Fan speed		min	med	max	min	med	max	min	med	max	min	med	max
Total cooling capacity (1) (E)	kW	1,98	2,63	3,51	2,48	3,39	4,58	2,51	3,27	4,33	2,78	3,70	4,96
Sensible cooling capacity (1) (E)	kW	1,45	2,04	2,75	1,73	2,37	3,22	1,80	2,45	3,15	1,94	2,59	3,50
Water flow(1)	l/h	340	451	602	427	582	785	431	561	743	477	635	850
Water pressure drop (1) (E)	kPa	4	7	12	6	11	18	5	8	12	7	12	20
Heating capacity (2) (E)	kW	2,81	3,69	4,78	3,01	4,08	5,49	2,98	3,90	5,10	3,36	4,45	5,95
Water pressure drop (2) (E)	kPa	4	6	10	5	9	14	4	6	10	6	10	17
Heating capacity (3)	kW	4,83	6,34	8,21	5,06	6,84	9,22	5,03	6,57	8,50	5,64	7,46	9,98
Water flow (3)	l/h	424	556	720	444	601	808	442	576	752	495	654	876
Water pressure drop (3)	kPa	5	8	13	5	8	14	4	6	10	6	10	16
Air flow	m^3/h	320	450	640	320	450	640	361	497	706	361	497	706
Power input (E)	W	40	50	65	37	61	98	38	61	98	38	61	98
Sound power level (4) (E)	dB/A	35	43	52	35	43	52	35	43	53	35	43	53
Additional coil heating capacity (3) (E)	kW	3,21	3,96	4,80	not available			3,60	4,25	5,05	not available		
Water flow (3)	l/h	282	347	421	not available			316	373	443	not available		
Water pressure drop (3) (E)	kPa	4	6	9	not available			7	9	12	not available		



Rated technical data

ESTRO		9			9M			95			10		
Fan speed		min	med	max	min	med	max	min	med	max	min	med	max
Total cooling capacity (1) (E)	kW	3,00	3,66	4,51	3,52	4,37	5,40	3,42	4,19	5,26	3,97	5,27	6,71
Sensible cooling capacity (1) (E)	kW	2,32	2,92	3,65	2,47	3,07	3,82	2,34	3,00	3,83	2,84	3,83	4,91
Water flow(1)	l/h	544	664	818	605	750	926	587	719	902	681	904	1152
Water pressure drop (1) (E)	kPa	7	10	14	11	16	24	10	14	21	5	9	12
Heating capacity (2) (E)	kW	3,96	4,87	5,95	4,24	5,24	6,47	4,22	5,17	6,57	4,77	6,22	7,83
Water pressure drop (2) (E)	kPa	6	8	12	9	13	19	8	11	17	5	7	12
Heating capacity (3)	kW	6,69	8,25	10,1	7,11	8,79	10,9	7,10	8,72	11,1	8,06	10,5	13,1
Water flow (3)	l/h	588	724	884	623	772	953	623	765	973	707	918	1152
Water pressure drop (3)	kPa	6	9	12	9	13	19	8	11	17	4	6	9
Air flow	m³/h	470	605	785	470	605	785	488	615	814	570	771	1011
Power input (E)	W	47	68	98	47	68	98	52	73	107	86	127	182
Sound power level (4) (E)	dB/A	43	49	56	43	49	56	44	51	58	47	54	61
Additional coil heating capacity (3) (E)	kW	4,04	4,65	5,30	not available			4,21	4,78	5,51	5,69	6,83	7,91
Water flow (3)	l/h	355	408	465	not available			369	419	483	499	600	694
Water pressure drop (3) (E)	kPa	6	8	10	not available			9	11	14	17	23	30

ESTRO		10M			11			11M			12		
Fan speed		min	med	max	min	med	max	min	med	max	min	med	max
Total cooling capacity (1) (E)	kW	4,41	5,82	7,38	4,11	6,24	8,02	4,66	6,98	8,98	6,97	8,77	11,0
Sensible cooling capacity (1) (E)	kW	3,07	4,06	5,17	3,05	4,63	5,96	3,29	4,95	6,39	5,12	6,46	8,07
Water flow(1)	l/h	756	999	1267	706	1071	1075	800	1199	1541	1196	1505	1879
Water pressure drop (1) (E)	kPa	8	14	21	6	13	20	9	19	29	14	22	32
Heating capacity (2) (E)	kW	5,15	6,70	8,40	5,24	7,80	10,0	5,70	8,43	10,8	8,90	11,1	14,5
Water pressure drop (2) (E)	kPa	7	11	17	5	11	16	8	15	24	12	18	26
Heating capacity (3)	kW	8,63	11,2	14,0	8,91	13,2	16,9	9,57	14,2	18,2	15,0	18,8	24,7
Water flow (3)	l/h	757	983	1232	782	1158	1486	840	1242	1593	1317	1645	2164
Water pressure drop (3)	kPa	6	10	15	6	11	17	8	15	24	13	19	31
Air flow	m³/h	670	771	1011	642	1022	1393	642	1022	1393	1010	1317	1850
Power input (E)	W	86	127	182	109	169	244	109	169	244	210	240	310
Sound power level (4) (E)	dB/A	47	54	61	49	60	67	49	60	67	60	64	71
Additional coil heating capacity (3) (E)	kW	not available			5,50	7,14	8,35	not available			7,85	9,08	10,8
Water flow (3)	l/h	not available			483	627	733	not available			689	797	948
Water pressure drop (3) (E)	kPa	not available			14	23	30	not available			26	33	45

(1) Water temperature 7-12°C, air temperature D.B. 27°C, W.B. 19°C (47% relative humidity)
(2) Inlet water temperature 50°C, water flow rate same as in cooling mode, air temperature 20°C
(3) Water temperature 70 / 60°C, air temperature 20°C
(4) Sound power measured according to standards ISO 3741 and ISO 3742
(E) EUROVENT certified data

Dimensional drawings

ESTRO FL - CL

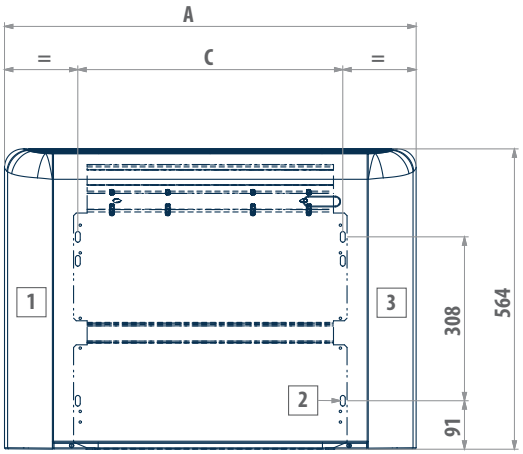

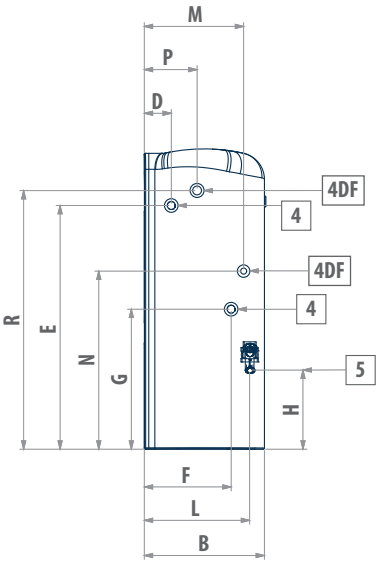

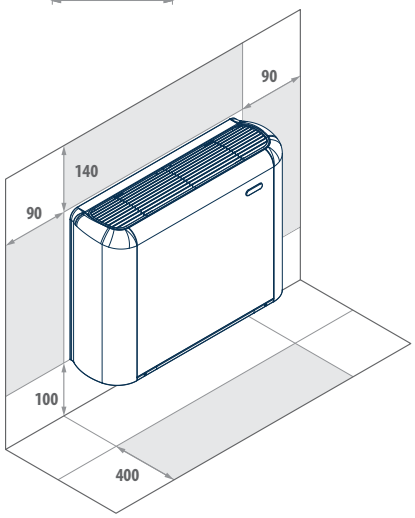

LEGEND	
1	Usable space for plumbing connections
2	Slots for installation on the wall
3	Usable space for electrical connections
4	Standard heat exchanger water connections
4DF	DF 1-row DF additional heat exchanger water connections
5	Condensate drainage

ESTRO FL	ESTRO CL	A	B	C	D	E	F	G	H	L	M	N	P	R	4	4DF	5
1 - 4M	1 - 4M	774	226	498	51	458	163	263	149	198	187	335	99	486	1 / 2"	1 / 2"	16
5 - 6M	5 - 6M	984	226	708	51	458	163	263	149	198	187	335	99	486	1 / 2"	1 / 2"	16
7 - 9M	7 - 9M	1194	226	918	51	458	163	263	149	198	187	335	99	486	1 / 2"	1 / 2"	16
95	ND	1194	251	918	48	497	185	259	155	220	195	348	120	478	3 / 4"	1 / 2"	16
10 - 11M	ND	1404	251	1128	48	497	185	259	155	220	195	348	120	478	3 / 4"	1 / 2"	16
12	ND	1614	251	1338	48	497	185	259	155	220	195	348	120	478	3 / 4"	1 / 2"	16



Dimensional drawings

ESTRO FA

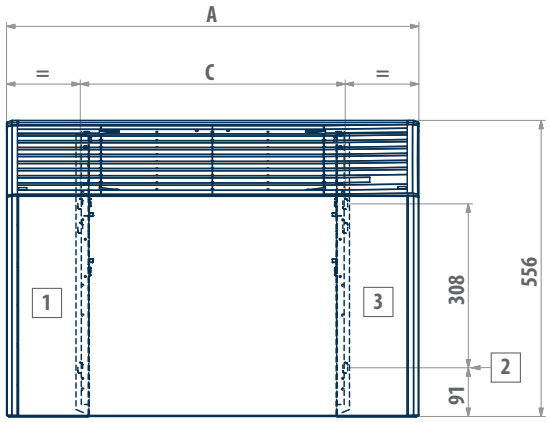

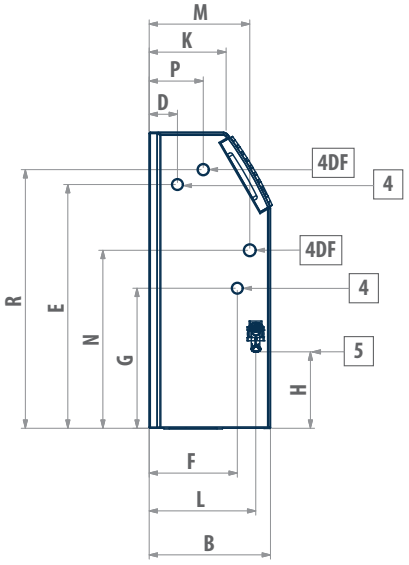

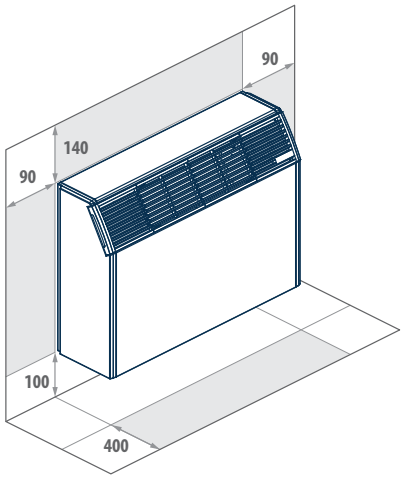

LEGEND	
1	Usable space for plumbing connections
2	Slots for installation on the wall
3	Usable space for electrical connections
4	Standard heat exchanger water connections
4DF	DF 1-row DF additional heat exchanger water connections
5	Condensate drainage

ESTRO FA	A	B	C	D	E	F	G	H	K	L	M	N	P	R	4	4DF	5
1 - 4M	774	228	498	53	458	166	263	149	145	198	187	335	99	486	1 / 2"	1 / 2"	16
5 - 6M	984	228	708	53	458	166	263	149	145	198	187	335	99	486	1 / 2"	1 / 2"	16
7 - 9M	1194	228	918	53	458	166	263	149	145	198	187	335	99	486	1 / 2"	1 / 2"	16
10 - 11M	1404	253	1128	50	497	188	259	155	170	220	195	348	120	478	3 / 4"	1 / 2"	16
12	1614	253	1338	50	497	188	259	155	170	220	195	348	120	478	3 / 4"	1 / 2"	16

Dimensional drawings

ESTRO FU

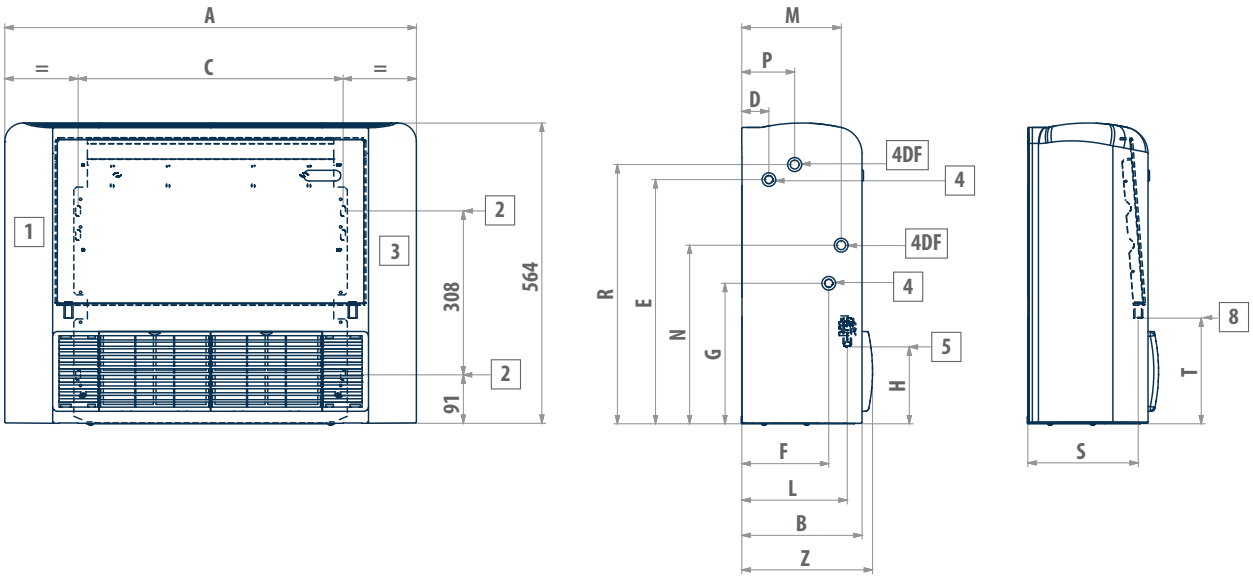

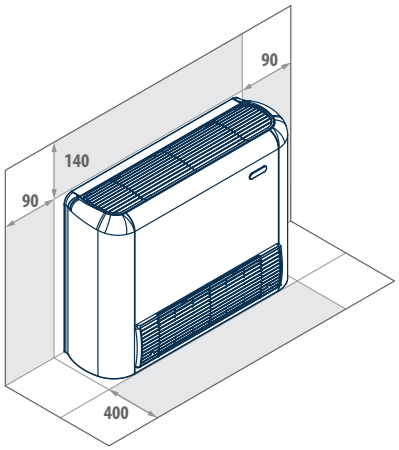

LEGEND

1	Usable space for plumbing connections
2	Slots for installation on the wall
3	Usable space for electrical connections
4	Standard heat exchanger water connections
4DF	DF 1-row DF additional heat exchanger water connections
5	Drain outlet for vertical installation
8	Drain outlet for horizontal installation

ESTRO FU	A	B	C	D	E	F	G	H	L	M	N	P	R	S	T	Z	4	4DF	5
1 - 4M	774	226	498	51	458	163	263	149	198	187	335	99	486	208	198	246	1 / 2"	1 / 2"	16
5 - 6M	984	226	708	51	458	163	263	149	198	187	335	99	486	208	198	246	1 / 2"	1 / 2"	16
7 - 9M	1194	226	918	51	458	163	263	149	198	187	335	99	486	208	198	246	1 / 2"	1 / 2"	16
95	1194	251	918	48	497	185	259	155	220	195	348	120	478	234	208	271	3 / 4"	1 / 2"	16
10 - 11M	1404	251	1128	48	497	185	259	155	220	195	348	120	478	234	208	271	3 / 4"	1 / 2"	16
12	1614	251	1338	48	497	185	259	155	220	195	348	120	478	234	208	271	3 / 4"	1 / 2"	16



Dimensional drawings

ESTRO FP

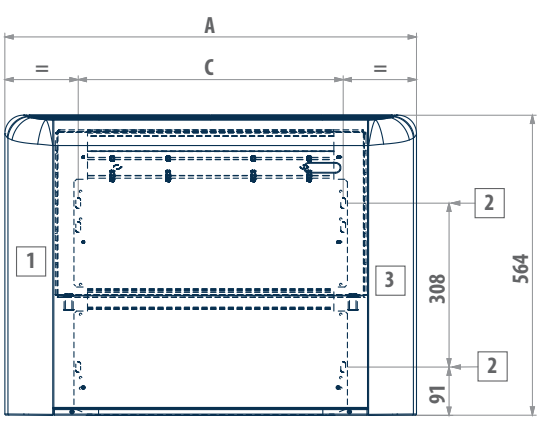

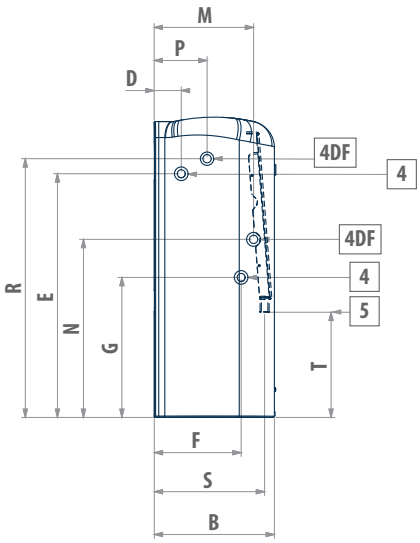

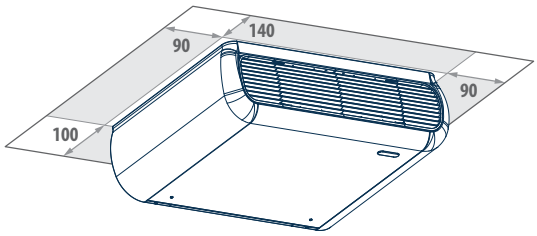

LEGEND	
1	Usable space for plumbing connections
2	Slots for installation on the wall
3	Usable space for electrical connections
4	Standard heat exchanger water connections
4DF	DF 1-row DF additional heat exchanger water connections
5	Condensate drainage

ESTRO FP	A	B	C	D	E	F	G	M	N	P	R	S	T	4	4DF	5
1 - 4M	774	226	498	51	458	163	263	187	335	99	486	208	198	1 / 2"	1 / 2"	16
5 - 6M	984	226	708	51	458	163	263	187	335	99	486	208	198	1 / 2"	1 / 2"	16
7 - 9M	1194	226	918	51	458	163	263	187	335	99	486	208	198	1 / 2"	1 / 2"	16
95	1194	251	918	48	497	185	259	195	348	120	478	234	208	3 / 4"	1 / 2"	16
10 - 11M	1404	251	1128	48	497	185	259	195	348	120	478	234	208	3 / 4"	1 / 2"	16
12	1614	251	1338	48	497	185	259	195	348	120	478	234	208	3 / 4"	1 / 2"	16

Dimensional drawings

ESTRO FB

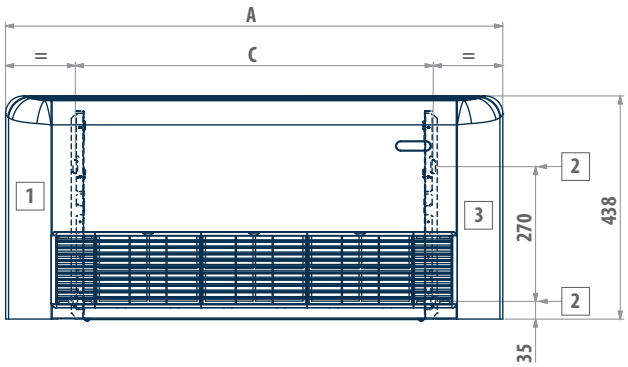

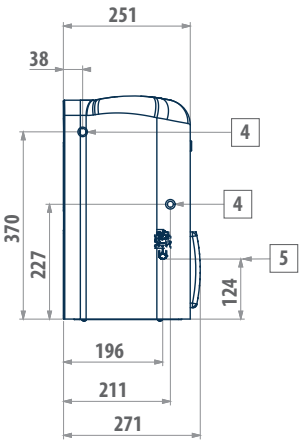

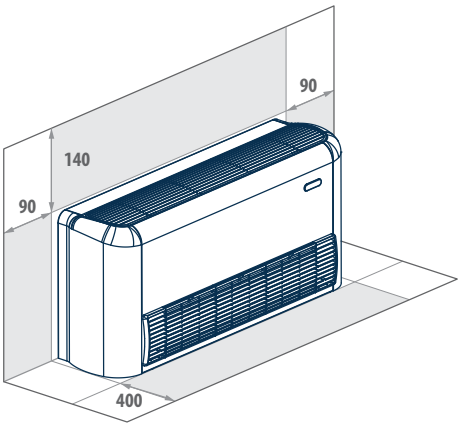

LEGEND	
1	Usable space for plumbing connections
2	Slots for installation on the wall
3	Usable space for electrical connections
4	Standard heat exchanger water connections
5	Condensate drainage

ESTRO FB	A	C	4	5
1 - 4M	774	498	1 / 2"	16
5 - 6M	984	708	1 / 2"	16
7 - 9M	1194	918	1 / 2"	16



Dimensional drawings

ESTRO FC

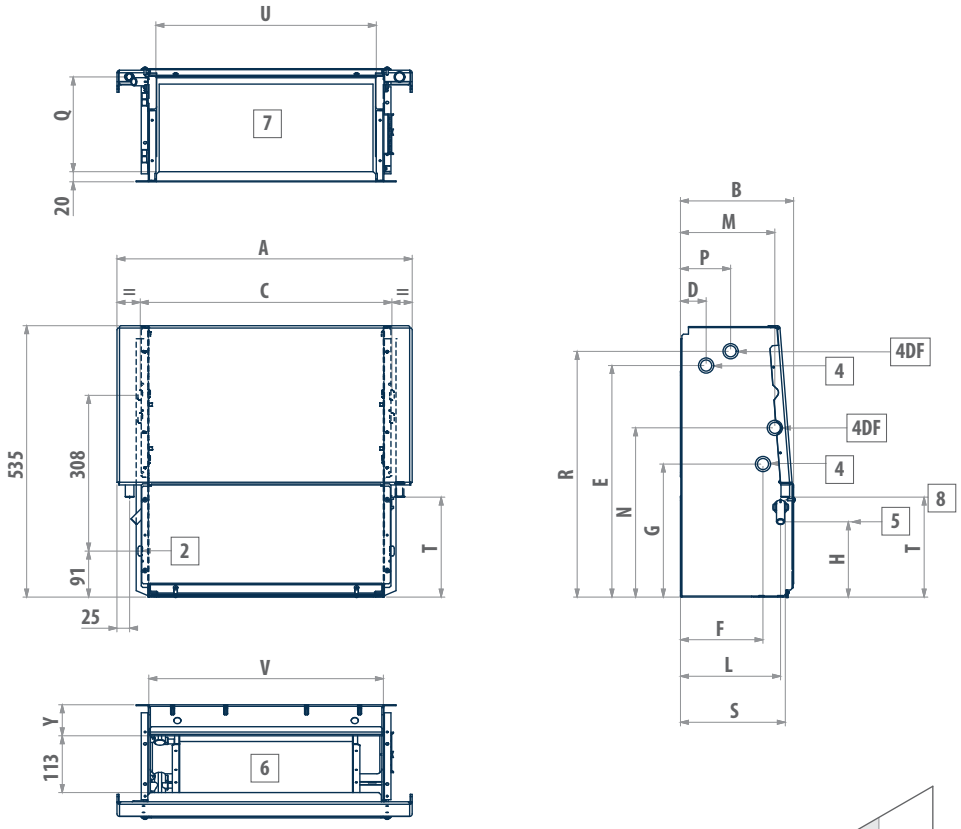

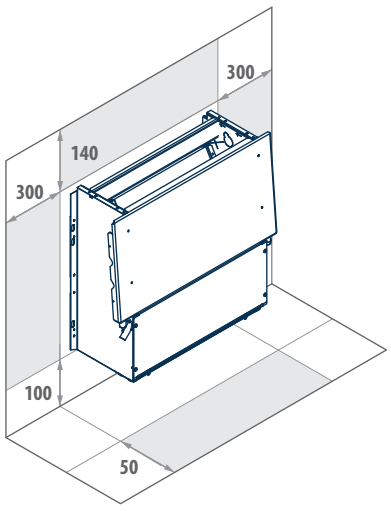

LEGEND	
2	Slots for installation on the wall
4	Standard heat exchanger water connections
4DF	DF 1-row DF additional heat exchanger water connections
5	Drain outlet for vertical installation
6	Air outlet
7	Air intake
8	Drain outlet for horizontal installation

ESTRO FC	A	B	C	D	E	F	G	H	L	M	N	P	Q	R	S	T	U	V	Y	4	4DF	5
1 - 4M	584	224	498	51	458	163	263	149	198	187	335	99	189	486	208	198	436	464	61	1 / 2"	1 / 2"	16
5 - 6M	794	224	708	51	458	163	263	149	198	187	335	99	189	486	208	198	646	674	61	1 / 2"	1 / 2"	16
7 - 9M	1004	224	918	51	458	163	263	149	198	187	335	99	189	486	208	198	856	884	61	1 / 2"	1 / 2"	16
95	1004	249	918	48	497	185	259	155	220	195	348	120	215	478	234	208	856	884	67	3 / 4"	1 / 2"	16
10 - 11M	1214	249	1128	48	497	185	259	155	220	195	348	120	215	478	234	208	1066	1094	67	3 / 4"	1 / 2"	16
12	1424	249	1338	48	497	185	259	155	220	195	348	120	215	478	234	208	1276	1304	67	3 / 4"	1 / 2"	16

Dimensional drawings

ESTRO FF

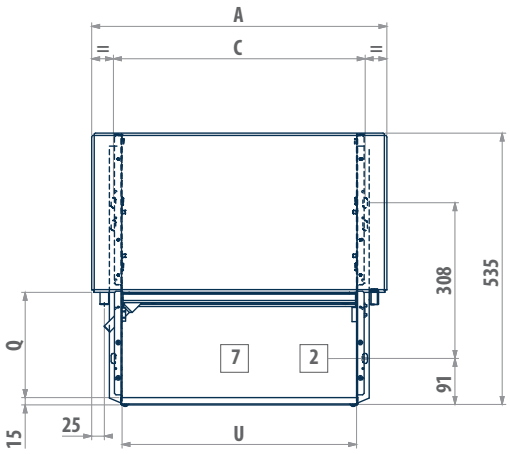

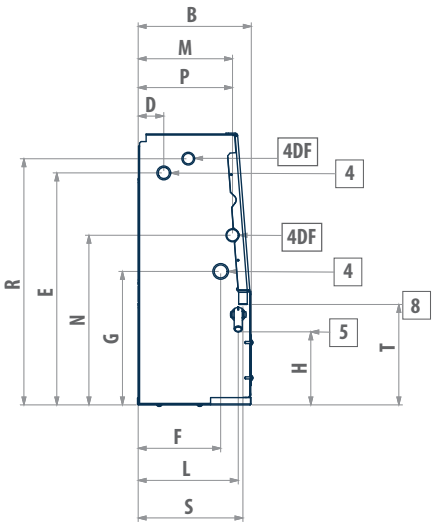

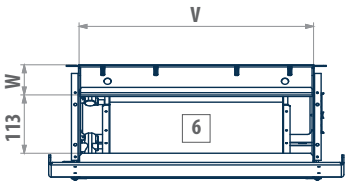

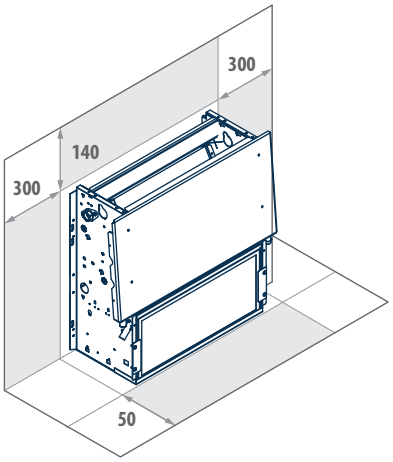

LEGEND

2	Slots for installation on the wall
4	Standard heat exchanger water connections
4DF	DF 1-row DF additional heat exchanger water connections
5	Drain outlet for vertical installation
6	Air outlet
7	Air intake
8	Drain outlet for horizontal installation

ESTRO FF	A	B	C	D	E	F	G	H	L	M	N	P	Q	R	S	T	U	V	W	4	4DF	5
1 - 4M	584	224	498	51	458	163	263	149	198	187	335	99	189	486	208	198	436	464	61	1 / 2"	1 / 2"	16
5 - 6M	794	224	708	51	458	163	263	149	198	187	335	99	189	486	208	198	646	674	61	1 / 2"	1 / 2"	16
7 - 9M	1004	224	918	51	458	163	263	149	198	187	335	99	189	486	208	198	856	884	61	1 / 2"	1 / 2"	16
95	1004	249	918	48	497	185	259	155	220	195	348	120	215	478	234	208	856	884	67	3 / 4"	1 / 2"	16
10 - 11M	1214	249	1128	48	497	185	259	155	220	195	348	120	215	478	234	208	1066	1094	67	3 / 4"	1 / 2"	16
12	1424	249	1338	48	497	185	259	155	220	195	348	120	215	478	234	208	1276	1304	67	3 / 4"	1 / 2"	16



Dimensional drawings

ESTRO FBC

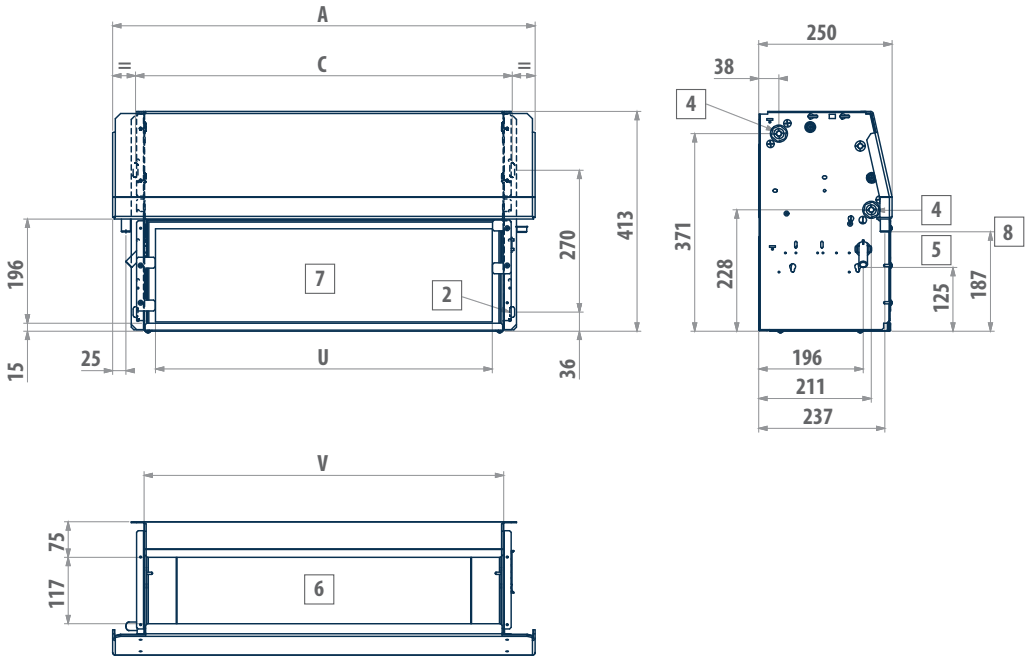

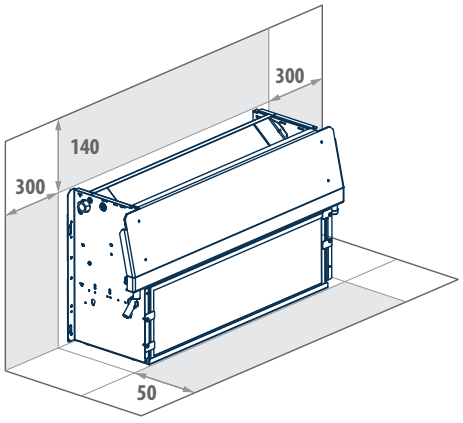

LEGEND	
2	Slots for installation on the wall
4	Standard heat exchanger water connections
5	Drain outlet for vertical installation
6	Air outlet
7	Air intake
8	Drain outlet for horizontal installation

ESTRO FBC	A	C	U	V	4	5
1 - 4M	584	498	423	464	1 / 2"	16
5 - 6M	794	708	633	674	1 / 2"	16
7 - 9M	1004	918	843	884	1 / 2"	16

Fan coil units with centrifugal fan and BLDC motor

ESTRO i 1 - 9 kW





Brushless motor | 2-pipe system | 4-pipe system | Vertical installation | Horizontal installation | Centrifugal fan | ERGO Supervision

Energy savings and comfort in a single solution

The continual innovation that characterizes the design of ESTRO has resulted in fan assemblies with inverter-controlled permanent magnet BLDC motors.
The use of this type of motor makes it possible to achieve a major reduction in power consumption, better perceived comfort in terms of temperature and humidity and considerable reductions in noise emissions.
Analyses and verifications have shown a reduction in consumption of no less than 70% with integrated operation compared to traditional AC motors, with a corresponding reduction in CO_2 emissions.
The DC Inverter technology allows to continuously adjust the air flow to the actual needs of the environment by considerably reducing the fluctuations in room temperature that are typical of step-by-step adjustments.
The continuous modulation of air flow brings about an adjustment in the delivered heating capacity, so that the interior is brought quickly to the set conditions and the noise levels are exceptionally low while they are being maintained
ESTRO fan coil units MYCOMFORT LARGE and EVO microprocessor control panels, which, thanks to the analogue outputs and refined adjustment logics, perfectly control the operation of the BLDC motors and modulating valves.

PLUS

- Inverter-controlled BLDC motor
- Low energy consumption
- Modulating operation
- Extremely quiet operation
- Can be integrated into the ERGO
- Heat exchanger up to 4 rows
- Incorporable ioniser



AVAILABLE VERSIONS

ESTRO FL i Wall mounted with cabinet
ESTRO FA i Wall recess mounted with cabinet
ESTRO CL i Wall mounted with cabinet
ESTRO FU i Floor and ceiling mounted with cabinet
ESTRO FP i Ceiling mounted with cabinet
ESTRO FB i Floor and ceiling mounted with low cabinet
ESTRO FC i Vertical / horizontal recess mounted with rear air intake
ESTRO FF i Vertical / horizontal recess mounted with front air intake
ESTRO FBC i Vertical / horizontal recess mounted with low cabinet and front air intake



MAIN COMPONENTS

Cabinet

Composed of a painted steel sheet panel, side panels, air outlet grille (swinging by 180°) and back suction grille built from ABS.

Structure

Built from galvanised steel sheet of extra thickness, heat and sound insulated by means of Class 1 self-extinguishing panels. FUi – FBi – FCi – FFi and FBCi versions are suitable for either vertical or horizontal installation thanks to the dual condensate collection and drainage system.

Heat exchanger

High efficiency heat exchanger made with copper piping and aluminium fins, provided with brass manifolds and vent valve. The water connections are reversible at the time of installation. On request it is possible to mount an additional heat exchanger for 4-pipe systems.



Fans

Double suction centrifugal fans, statically and dynamically balanced, manufactured from anti-static ABS, with blades having an airfoil section and offset modules. The fans are housed in a low-noise ABS volute with high-efficiency profile.

BLDC electric motor

Permanent magnet motor The unit is equipped with an inverter board to control the motor, that makes it possible to precisely set the maximum rotation speed of the motor (control signal 0-10 V).

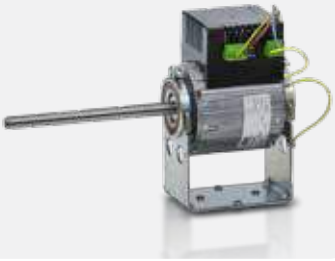

Air filter

Honey-comb polypropylene washable air filter, easily removable for maintenance operations. On Fui and Fbi versions the air filters are fitted onto the air inlet grille.

ACCESSORIES

Wall-mounted microprocessor electronic control panels	
MCLE	MYCOMFORT LARGE electronic controller with display
KBE	Mycomfort on-board installation kit
DIST	Mycomfort controller spacer for wall mounting
MCSWE	Water sensor for EVO, MYCOMFORT and LED503 controller
MCSUE	Humidity sensor for EVO, MYCOMFORT MEDIUM and LARGE controller
EVODISP	EVO CLOCK Remote display
EVOBOARD	EVO 230V circuit board
Power interface and regulating louver controllers	
CSB	On-board controller for opening and closing the motor-driven regulating louver
CSD	Recess mounted controller for opening and closing the SM motor-driven regulating louver
Additional heat exchanger for 4-pipe systems	
DF	1-row additional heat exchanger for 4-pipe systems (not suitable for "M" models)
Auxiliary water drip trays, insulating shell, condensate drainage pump	
BV	Auxiliary water drip tray for vertical installation fan coil units
BH	Auxiliary water drip tray for horizontal installation fan coil units
GIVKR	Insulating shell for VK1S valve, water connections on the right
GIVKL	Insulating shell for VK1S valve, water connections on the left
KSC	Condensate drain kit
Support and covering elements	
ZL	Pair of support covering elements for Estro FLi
ZLG	Pair of support covering elements with front grille for Estro FLi
ZA	Pair of support covering elements for Estro FAi
ZAG	Pair of support covering elements with front grille for Estro FAi
ZC	Pair of support covering elements for Estro CLi
ZCG	Pair of support covering elements with front grille for Estro CLi
D	Supports for Estro FCi
Rear covering panels	
PV	Painted rear panel for vertical installation models with cabinet
PH	Painted rear panel for horizontal installation models with cabinet
Grilles	
GE+C	Aluminium external air intake grille, with subframe
GEF+C	Aluminium external air intake grille, with subframe and air filter
GM+C	Aluminium air outlet grille with 2-row fins and subframe
RGC	Plenum with circular collars for air outlet grille

Plenum and connectors	
RM90	Angular outlet connector
RM90C	Angular outlet insulated connector
RMD	Straight outlet connector
RMCD	Straight outlet insulated connector
RA90	Angular inlet connector
RAD	Straight inlet connector
RMCD C	Air outlet plenum with circular collars
RAD C	Air inlet plenum with circular collars
External air intake louvers	
S	Manual external air intake louver
SM	Motor-driven louver, with motor on the right with transformer
	Motor driven louver, with motor on the left, with transformer
SMC	Motor driven louver, with motor on the right, for centralised control
	Motor driven louver, with motor on the left, for centralised control
Valves	
VK	3-way valve, 230V actuator, hydraulic kit for standard heat exchanger
	3-way valve, 230V actuator, hydraulic kit for DF heat exchanger
	3-way valve, 24V actuator, hydraulic kit for standard heat exchanger
	3-way valve, 24V actuator, hydraulic kit for DF heat exchanger
VKM	3-way valve, modulating actuator, hydraulic kit for standard heat exchanger
	3-way valve, modulating actuator, hydraulic kit for DF heat exchanger
VK	3-way valve, 230V actuator, hydraulic kit on heat exchanger side for standard heat exchanger
	3-way valve, 230V actuator, hydraulic kit on heat exchanger side for DF heat exchanger
	3-way valve, 24V actuator, hydraulic kit on heat exchanger side for standard heat exchanger
	3-way valve, 24V actuator, hydraulic kit on heat exchanger side for DF heat exchanger
VKM	3-way valve, modulating actuator, hydraulic kit on heat exchanger side for standard heat exchanger
	3-way valve, modulating actuator, hydraulic kit on heat exchanger side for DF heat exchanger
KV	2-way valve, 230V actuator, hydraulic kit on water connection side for standard heat exchanger
	2-way valve, 230V actuators, hydraulic kit on water connection side for standard and DF heat exchanger
	2-way valve, 24V actuator, hydraulic kit on water connection side for standard heat exchanger
	2-way valve, 24V actuator, hydraulic kit on water connection side for standard and DF heat exchanger
KVM	2-way valve, modulating actuator, hydraulic kit on water connection side for standard heat exchanger
	2-way valve, modulating actuators, hydraulic kit on water connection side for standard and DF heat exchanger

Rated technical data

ESTRO i		1			3			4			4M		
Fan speed		min	med	max	min	med	max	min	med	max	min	med	max
Total cooling capacity (1) (E)	kW	0,77	0,92	1,15	1,26	1,52	1,74	1,36	1,70	1,96	1,50	1,85	2,24
Sensible cooling capacity (1) (E)	kW	0,59	0,70	0,87	0,95	1,14	1,30	1,00	1,24	1,42	1,06	1,32	1,60
Water flow(1)	l/h	133	158	198	216	260	299	234	292	338	260	317	385
Water pressure drop (1) (E)	kPa	4	5	7	8	11	14	6	10	13	10	14	20
Heating capacity (2) (E)	kW	1,11	1,30	1,55	1,71	2,04	2,20	1,79	2,18	2,57	1,83	2,26	2,74
Water pressure drop (2) (E)	kPa	3	4	6	7	9	12	5	8	11	8	11	16
Heating capacity (3)	kW	1,94	2,27	2,68	2,93	3,50	3,74	3,04	3,67	4,35	3,08	3,80	4,62
Water flow (3)	l/h	170	198	234	259	306	328	267	324	382	270	335	403
Water pressure drop (3)	kPa	4	6	8	8	11	13	6	8	11	8	12	16
Air flow	m³/h	149	189	231	211	271	344	211	271	344	211	271	344
Power imput (E)	W	5	6	7	7	9	19	7	9	19	7	9	19
Sound power level (4) (E)	dB/A	30	32	40	38	44	49	40	44	50	41	45	51
Additional coil heating capacity (3) (E)	kW	1,35	1,50	1,70	1,56	1,78	2,02	1,56	1,78	2,01	not available		
Water flow (3)	l/h	118	132	151	137	155	176	137	154	177	not available		
Water pressure drop (3) (E)	kPa	3	4	4	5	7	8	6	8	11	not available		

ESTRO i		5			6			6M			7		
Fan speed		min	med	max	min	med	max	min	med	max	min	med	max
Total cooling capacity (1) (E)	kW	1,60	2,03	2,42	1,76	2,38	2,93	1,93	2,64	3,29	1,98	2,63	3,51
Sensible cooling capacity (1) (E)	kW	1,18	1,57	1,88	1,26	1,70	2,11	1,33	1,83	2,30	1,45	2,04	2,75
Water flow(1)	l/h	374	349	414	302	408	503	331	453	565	340	451	602
Water pressure drop (1) (E)	kPa	8	12	16	5	8	11	7	12	17	4	7	12
Heating capacity (2) (E)	kW	2,07	2,68	3,20	2,28	2,83	3,50	2,33	3,21	4,04	2,81	3,69	4,78
Water pressure drop (2) (E)	kPa	6	10	13	4	6	13	6	10	14	4	6	10
Heating capacity (3)	kW	3,52	4,57	5,40	3,86	5,22	6,46	3,91	5,39	6,79	4,83	6,34	8,21
Water flow (3)	l/h	310	400	479	339	458	567	343	473	595	424	556	720
Water pressure drop (3)	kPa	7	12	16	4	7	11	6	10	14	5	8	13
Air flow	m³/h	241	341	442	241	341	442	241	341	442	320	450	640
Power imput (E)	W	6	8	15	6	8	16	6	8	16	8	12	18
Sound power level (4) (E)	dB/A	35	43	48	35	42	48	34	42	48	35	43	52
Additional coil heating capacity (3) (E)	kW	2,06	2,53	2,92	2,18	2,68	3,08	not available			3,21	3,96	4,80
Water flow (3)	l/h	180	223	256	191	235	270	not available			282	347	421
Water pressure drop (3) (E)	kPa	2	3	4	3	4	5	not available			4	6	9

ESTRO i		7M			8			8M			9		
Fan speed		min	med	max	min	med	max	min	med	max	min	med	max
Total cooling capacity (1) (E)	kW	2,48	3,39	4,58	2,51	3,27	4,33	2,78	3,70	4,96	3,00	3,66	4,51
Sensible cooling capacity (1) (E)	kW	1,73	2,37	3,22	1,80	2,45	3,15	1,94	2,59	3,50	2,32	2,92	3,65
Water flow(1)	l/h	427	582	785	431	561	743	477	635	850	544	664	818
Water pressure drop (1) (E)	kPa	6	11	18	5	8	12	7	12	20	7	10	14
Heating capacity (2) (E)	kW	3,01	4,08	5,49	2,98	3,90	5,10	3,36	4,45	5,95	3,96	4,87	5,95
Water pressure drop (2) (E)	kPa	5	9	14	4	6	10	6	10	17	6	8	12
Heating capacity (3)	kW	5,06	6,84	9,22	5,03	6,57	8,50	5,64	7,46	9,98	6,69	8,25	10,1
Water flow (3)	l/h	444	601	808	442	576	752	495	654	876	588	724	884
Water pressure drop (3)	kPa	5	8	14	4	6	10	6	10	16	6	9	12
Air flow	m³/h	320	450	640	361	497	706	361	497	706	470	605	785
Power imput (E)	W	8	12	18	10	13	27	10	13	27	12	16	33
Sound power level (4) (E)	dB/A	35	43	52	35	43	53	35	43	53	43	49	56
Additional coil heating capacity (3) (E)	kW	not available			3,60	4,25	5,05	not available			4,04	4,65	5,30
Water flow (3)	l/h	not available			316	373	443	not available			355	408	465
Water pressure drop (3) (E)	kPa	not available			7	9	12	not available			6	8	10

(1) Water temperature 7-12°C, air temperature D.B. 27°C, W.B. 19°C (47% relative humidity)
(2) Inlet water temperature 50°C, water flow rate same as in cooling mode, air temperature 20°C
(3) Water temperature 70 / 60°C, air temperature 20°C
(4) Sound power measured according to standards ISO 3741 and ISO 3742
(E) EUROVENT certified data



Rated technical data

ESTRO i		9M			95			11			11M		
Fan speed		min	med	max	min	med	max	min	med	max	min	med	max
Total cooling capacity (1) (E)	kW	3,52	4,37	5,40	3,42	4,19	5,26	4,11	6,24	8,02	4,66	6,98	8,98
Sensible cooling capacity (1) (E)	kW	2,47	3,07	3,82	2,34	3,00	3,83	3,05	4,63	5,96	3,29	4,95	6,39
Water flow(1)	l/h	605	750	926	587	719	902	706	1071	1075	800	1199	1541
Water pressure drop (1) (E)	kPa	11	16	24	10	14	21	6	13	20	9	19	29
Heating capacity (2) (E)	kW	4,24	5,24	6,47	4,22	5,17	6,57	5,24	7,80	10,0	5,70	8,43	10,8
Water pressure drop (2) (E)	kPa	9	13	19	8	11	17	5	11	16	8	15	24
Heating capacity (3)	kW	7,11	8,79	10,9	7,10	8,72	11,1	8,91	13,2	16,9	9,57	14,2	18,2
Water flow (3)	l/h	623	772	953	623	765	973	782	1158	1486	840	1242	1593
Water pressure drop (3)	kPa	9	13	19	8	11	17	6	11	17	8	15	24
Air flow	m^3/h	470	605	785	488	615	814	642	1022	1393	642	1022	1393
Power imput (E)	W	12	16	33	13	16	37	13	38	87	13	38	87
Sound power level (4) (E)	dB/A	43	49	56	44	51	58	49	60	67	49	60	67
Additional coil heating capacity (3) (E)	kW	not available			4,21	4,78	5,51	5,50	7,14	8,35	not available		
Water flow (3)	l/h	not available			369	419	483	483	627	733	not available		
Water pressure drop (3) (E)	kPa	not available			9	11	14	14	23	30	not available		

(1) Water temperature 7-12°C, air temperature D.B. 27°C, W.B. 19°C (47% relative humidity)
(2) Inlet water temperature 50°C, water flow rate same as in cooling mode, air temperature 20°C
(3) Water temperature 70 / 60°C, air temperature 20°C
(4) Sound power measured according to standards ISO 3741 and ISO 3742
(E) EUROVENT certified data

Dimensional drawings

ESTRO i FL - CL

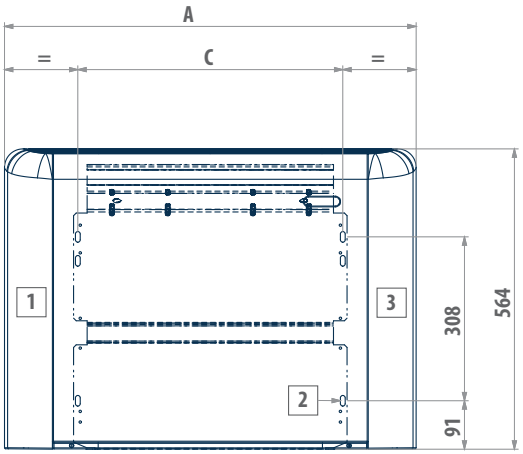

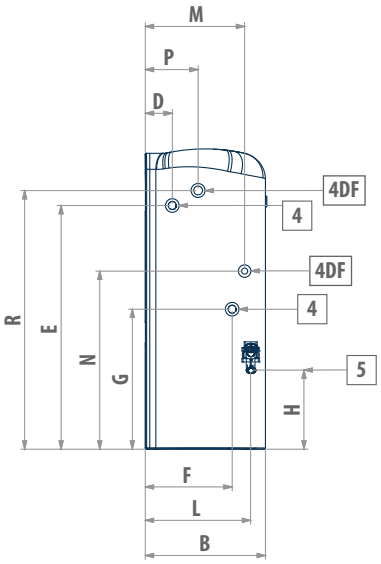

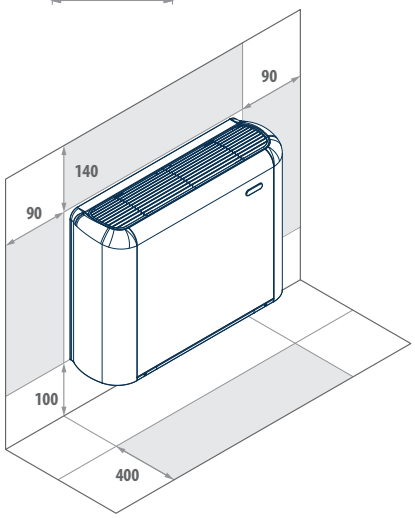

LEGEND

1	Usable space for plumbing connections
2	Slots for installation on the wall
3	Usable space for electrical connections
4	Standard heat exchanger water connections
4DF	DF 1-row DF additional heat exchanger water connections
5	Condensate drainage

ESTRO i FL	ESTRO i CL	A	B	C	D	E	F	G	H	L	M	N	P	R	4	4DF	5
1 - 4M	**1 - 4M**	774	226	498	51	458	163	263	149	198	187	335	99	486	1 / 2"	1 / 2"	16
5 - 6M	**5 - 6M**	984	226	708	51	458	163	263	149	198	187	335	99	486	1 / 2"	1 / 2"	16
7 - 9M	**7 - 9M**	1194	226	918	51	458	163	263	149	198	187	335	99	486	1 / 2"	1 / 2"	16
95	**ND**	1194	251	918	48	497	185	259	155	220	195	348	120	478	3 / 4"	1 / 2"	16
11 - 11M	**ND**	1404	251	1128	48	497	185	259	155	220	195	348	120	478	3 / 4"	1 / 2"	16



Dimensional drawings

ESTRO i FA

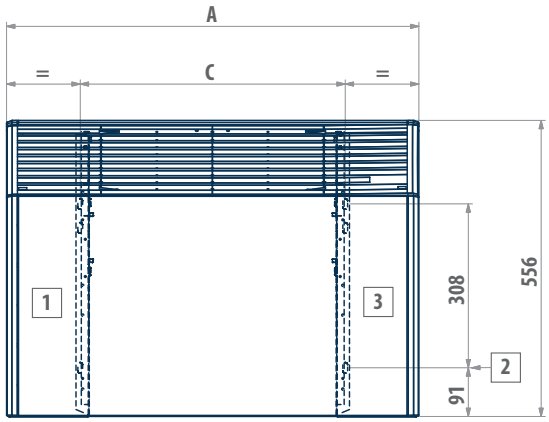

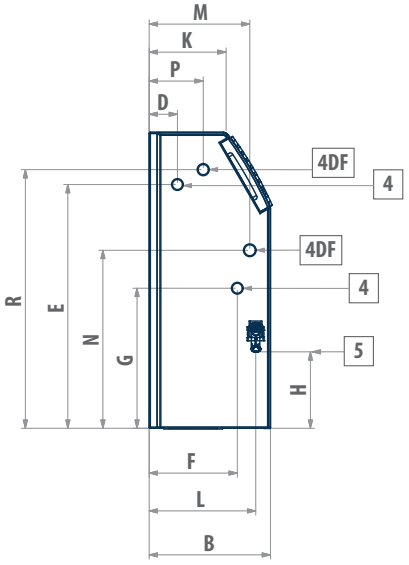

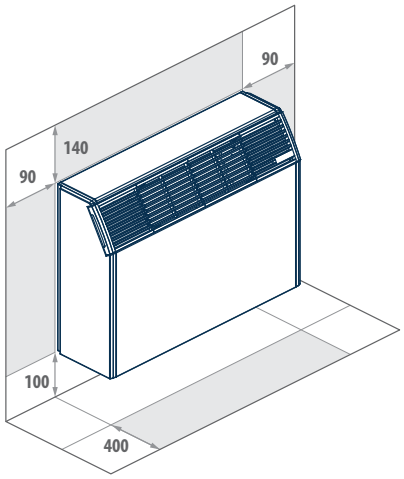

LEGEND	
1	Usable space for plumbing connections
2	Slots for installation on the wall
3	Usable space for electrical connections
4	Standard heat exchanger water connections
4DF	DF 1-row DF additional heat exchanger water connections
5	Condensate drainage

ESTRO i FA	A	B	C	D	E	F	G	H	K	L	M	N	P	R	4	4DF	5
1 - 4M	774	228	498	53	458	166	263	149	145	198	187	335	99	486	1 / 2"	1 / 2"	16
5 - 6M	984	228	708	53	458	166	263	149	145	198	187	335	99	486	1 / 2"	1 / 2"	16
7 - 9M	1194	228	918	53	458	166	263	149	145	198	187	335	99	486	1 / 2"	1 / 2"	16
11 - 11M	1404	253	1128	50	497	188	259	155	155	220	195	348	120	478	3 / 4"	1 / 2"	16

Dimensional drawings

ESTRO i FU

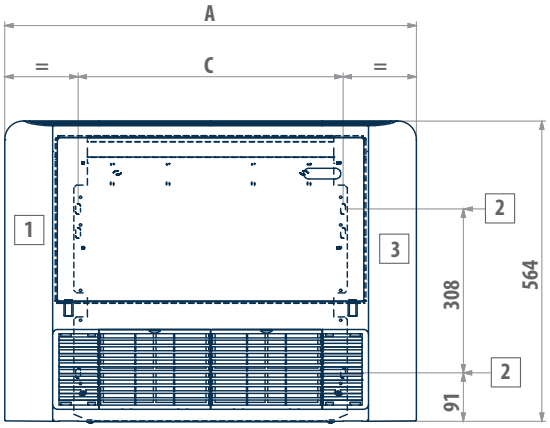

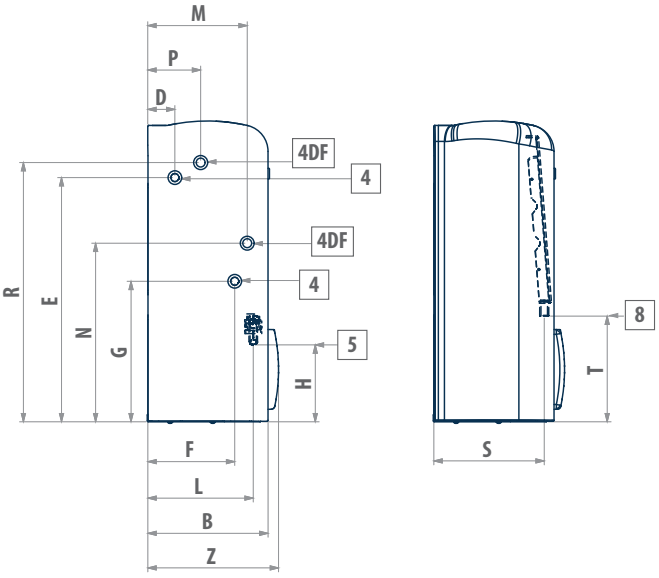

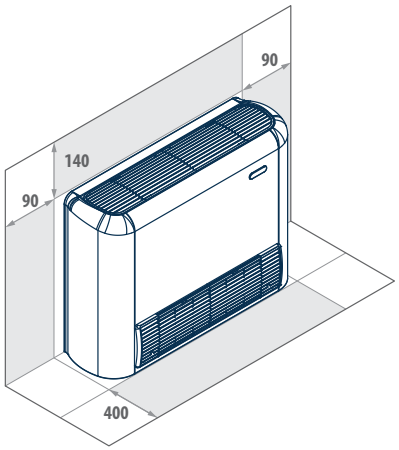

LEGEND

1	Usable space for plumbing connections
2	Slots for installation on the wall
3	Usable space for electrical connections
4	Standard heat exchanger water connections
4DF	DF 1-row DF additional heat exchanger water connections
5	Drain outlet for vertical installation
8	Drain outlet for horizontal installation

ESTRO i FU	A	B	C	D	E	F	G	H	L	M	N	P	R	S	T	Z	4	4DF	5
1 - 4M	774	226	498	51	458	163	263	149	198	187	335	99	486	208	198	246	1 / 2"	1 / 2"	16
5 - 6M	984	226	708	51	458	163	263	149	198	187	335	99	486	208	198	246	1 / 2"	1 / 2"	16
7 - 9M	1194	226	918	51	458	163	263	149	198	187	335	99	486	208	198	246	1 / 2"	1 / 2"	16
95	1194	251	918	48	497	185	259	155	220	195	348	120	478	234	208	271	3 / 4"	1 / 2"	16
11 - 11M	1404	251	1128	48	497	185	259	155	220	195	348	120	478	234	208	271	3 / 4"	1 / 2"	16



Dimensional drawings

ESTRO i FP

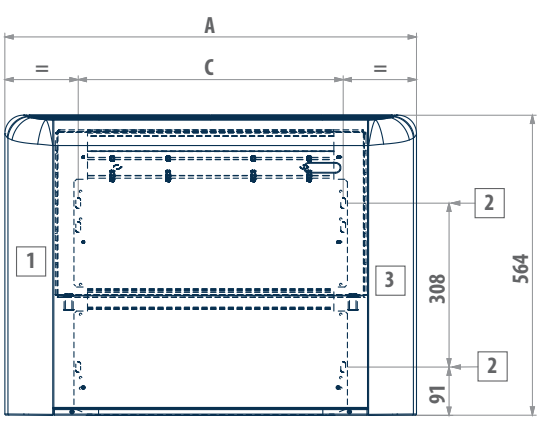

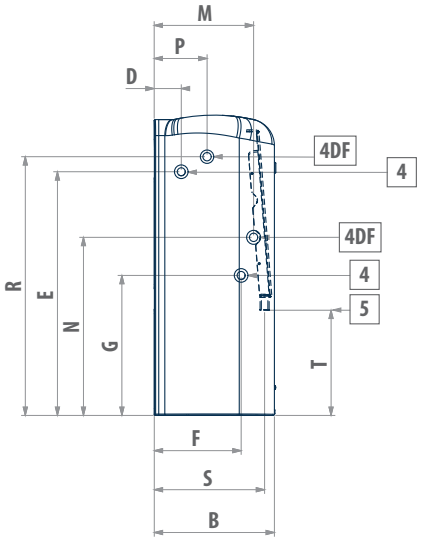

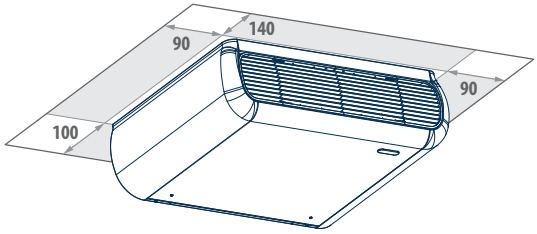

LEGEND	
1	Usable space for plumbing connections
2	Slots for installation on the wall
3	Usable space for electrical connections
4	Standard heat exchanger water connections
4DF	DF 1-row DF additional heat exchanger water connections
5	Condensate drainage

ESTRO i FP	A	B	C	D	E	F	G	M	N	P	R	S	T	4	4DF	5
1 - 4M	774	226	498	51	458	163	263	187	335	99	486	208	198	1 / 2"	1 / 2"	16
5 - 6M	984	226	708	51	458	163	263	187	335	99	486	208	198	1 / 2"	1 / 2"	16
7 - 9M	1194	226	918	51	458	163	263	187	335	99	486	208	198	1 / 2"	1 / 2"	16
95	1194	251	918	48	497	185	259	195	348	120	478	234	208	3 / 4"	1 / 2"	16
11 - 11M	1404	251	1128	48	497	185	259	195	348	120	478	234	208	3 / 4"	1 / 2"	16

Dimensional drawings

ESTRO i FB

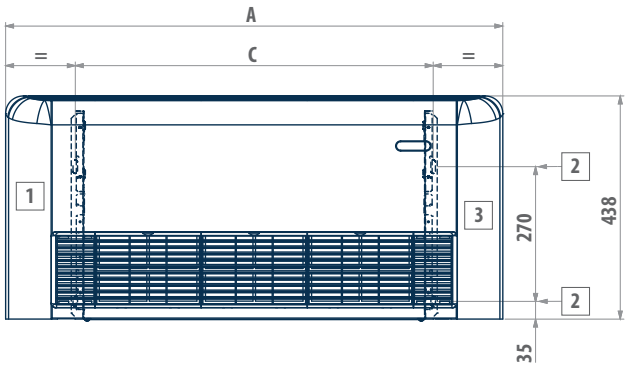

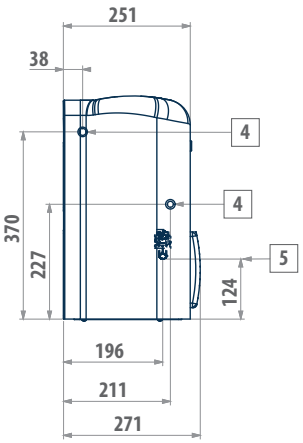

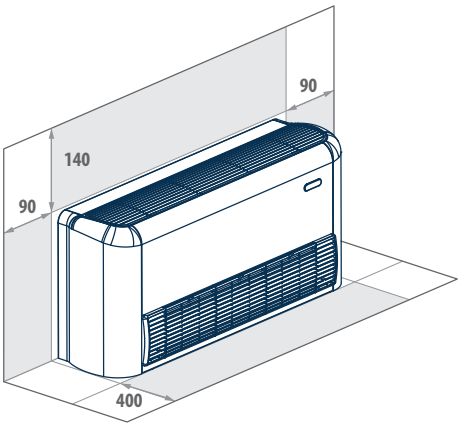

LEGEND

1	Usable space for plumbing connections
2	Slots for installation on the wall
3	Usable space for electrical connections
4	Standard heat exchanger water connections
5	Condensate drainage

ESTRO i FB	A	C	4	4DF	5
1 - 4M	774	498	1 / 2"	1 / 2"	16
5 - 6M	984	708	1 / 2"	1 / 2"	16
7 - 9M	1194	918	1 / 2"	1 / 2"	16



Dimensional drawings

ESTRO i FC

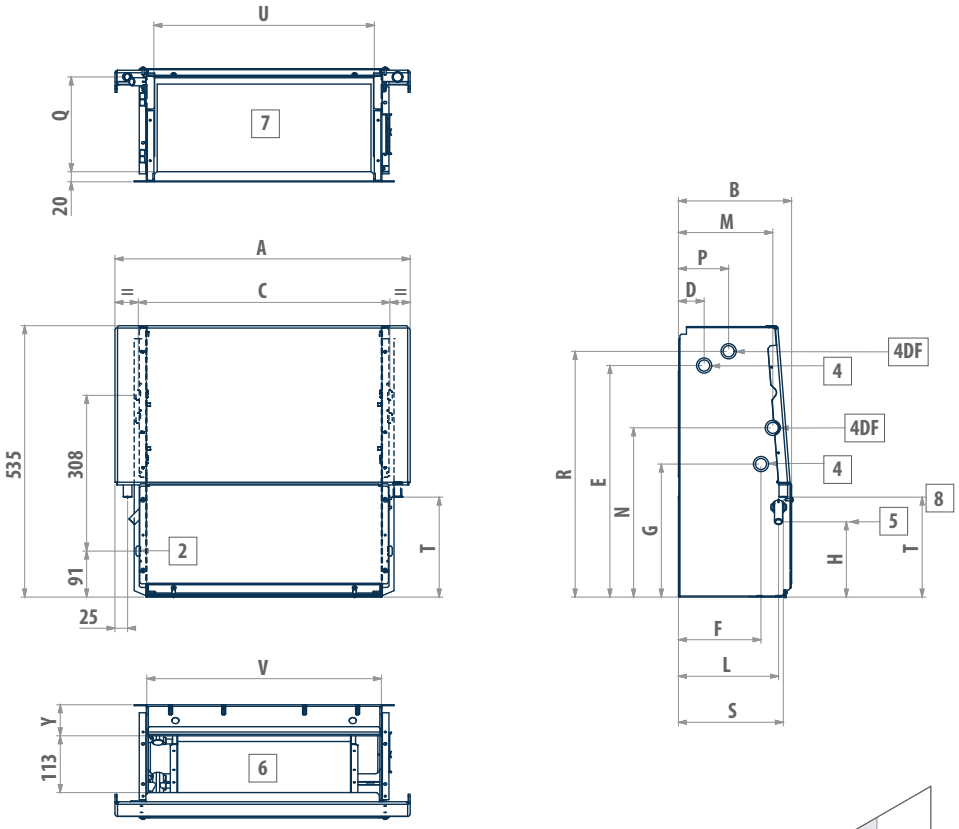

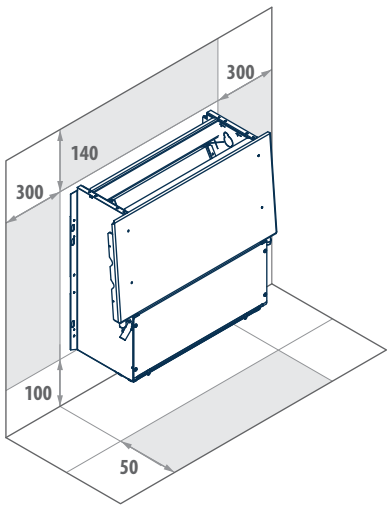

LEGEND	
2	Slots for installation on the wall
4	Standard heat exchanger water connections
4DF	DF 1-row DF additional heat exchanger water connections
5	Drain outlet for vertical installation
6	Air outlet
7	Air intake
8	Drain outlet for horizontal installation

ESTRO i FC	A	B	C	D	E	F	G	H	L	M	N	P	Q	R	S	T	U	V	Y	4	4DF	5
1 - 4M	584	224	498	51	458	163	263	149	198	187	335	99	189	486	208	198	436	464	61	1 / 2"	1 / 2"	16
5 - 6M	794	224	708	51	458	163	263	149	198	187	335	99	189	486	208	198	646	674	61	1 / 2"	1 / 2"	16
7 - 9M	1004	224	918	51	458	163	263	149	198	187	335	99	189	486	208	198	856	884	61	1 / 2"	1 / 2"	16
95	1004	249	918	48	497	185	259	155	220	195	348	120	215	478	234	208	856	884	67	3 / 4"	1 / 2"	16
11 - 11M	1214	249	1128	48	497	185	259	155	220	195	348	120	215	478	234	208	1066	1094	67	3 / 4"	1 / 2"	16

Dimensional drawings

ESTRO i FF

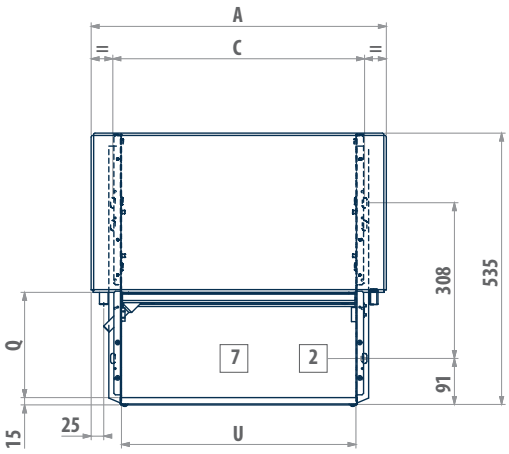

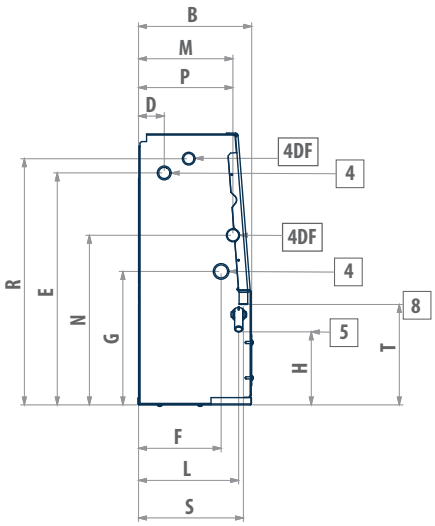

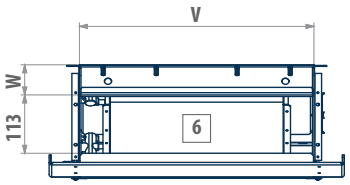

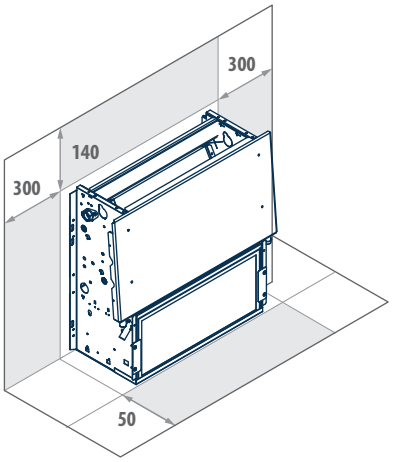

LEGEND

2	Slots for installation on the wall
4	Standard heat exchanger water connections
4DF	DF 1-row DF additional heat exchanger water connections
5	Drain outlet for vertical installation
6	Air outlet
7	Air intake
8	Drain outlet for horizontal installation

ESTRO i FF	A	B	C	D	E	F	G	H	L	M	N	P	Q	R	S	T	U	V	Y	4	4DF	5
1 - 4M	584	224	498	51	458	163	263	149	198	187	335	99	189	486	208	198	436	464	61	1 / 2"	1 / 2"	16
5 - 6M	794	224	708	51	458	163	263	149	198	187	335	99	189	486	208	198	646	674	61	1 / 2"	1 / 2"	16
7 - 9M	1004	224	918	51	458	163	263	149	198	187	335	99	189	486	208	198	856	884	61	1 / 2"	1 / 2"	16
95	1004	249	918	48	497	185	259	155	220	195	348	120	215	478	234	208	856	884	67	3 / 4"	1 / 2"	16
11 - 11M	1214	249	1128	48	497	185	259	155	220	195	348	120	215	478	234	208	1066	1094	67	3 / 4"	1 / 2"	16

Dimensional drawings

ESTRO i FBC

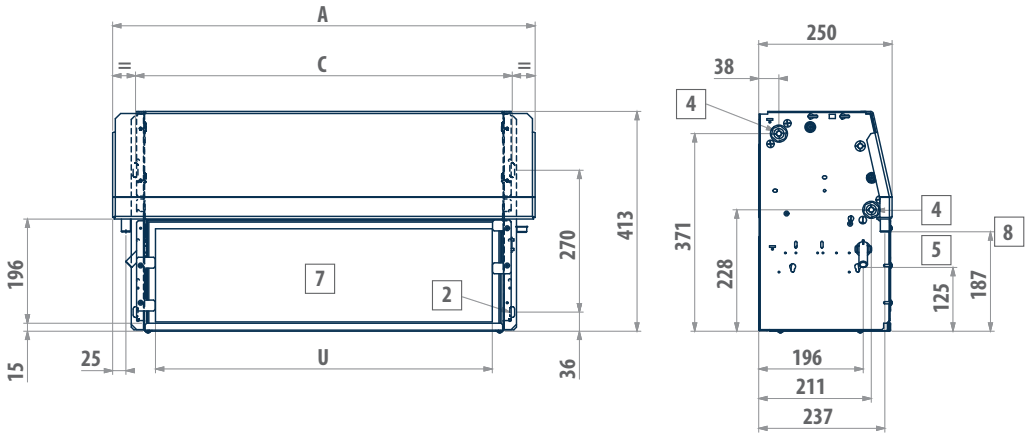

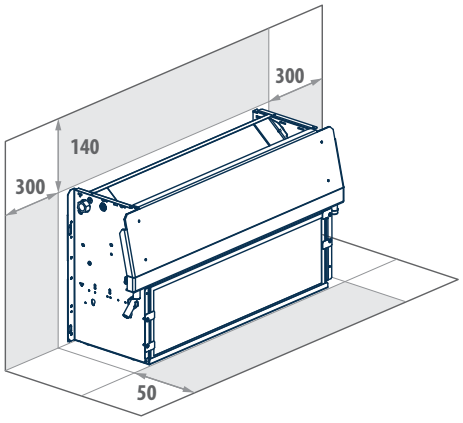

LEGEND	
2	Slots for installation on the wall
4	Standard heat exchanger water connections
5	Drain outlet for vertical installation
6	Air outlet
7	Air intake
8	Drain outlet for horizontal installation

ESTRO i FBC	A	C	U	V	4	4DF	5
1 - 4M	584	498	423	464	1 / 2"	1 / 2"	16
5 - 6M	794	708	633	674	1 / 2"	1 / 2"	16
7 - 9M	1004	918	843	884	1 / 2"	1 / 2"	16

Fan coil units with centrifugal fan and BLDC GreenTech technology

ESTRO GT 1 - 6 kW



Inverter Technology

BLDC Brushless motor | 2 2-pipe system | 4 4-pipe system | Vertical installation | Horizontal installation | Centrifugal fan | ERGO Supervision

PLUS

- GreenTech Technology
- Inverter-controlled BLDC motor
- Low energy consumption
- Modulating operation
- Extremely quiet operation
- Can be integrated into the ERGO
- Incorporable ioniser

The maximum expression of technology at the service of the hotel industry

GALLETTI's extensive experience in the manufacture of fan coil units and development of refined control logics was combined with the know-how of EBM-PAPST in the construction of fan drive assemblies in order to create ESTRO GT.
The ESTRO GT design was developed specifically for the hotel industry, where fan coil units represent the most convenient solution for air conditioning rooms given that they are efficient, reliable, quiet and simple to maintain.
With ESTRO GT it's almost like adding another star!
ESTRO GT uses fan drive assemblies with GreenTech technology, which means BLDC motors directly integrated with the fan assembly and inverter and 70% reductions in electricity consumption compared to traditional AC motors. The low electricity consumption is the ideal solution for installations in hotels, where the fan coil unit is running 80% of the time on average.
The extremely low noise levels and the possibility of continuous modulation of the fan speed fully satisfy guests' needs in terms of flexibility of use and quiet operation. ESTRO GT fan coil units use MYCOMFORT LARGE and EVO microprocessor control panels, which, thanks to the analogue outputs and refined adjustment logics, perfectly control the operation of the BLDC motors and modulating valves.
A wide range of accessories completes the offerings for recessed ceiling installation.

AVAILABLE VERSIONS

ESTRO GT FL Wall mounted with cabinet
ESTRO GT FA Wall recess mounted with cabinet
ESTRO GT CL Wall mounted with cabinet
ESTRO GT FU Floor and ceiling mounted with cabinet
ESTRO GT FP Ceiling mounted with cabinet
ESTRO GT FC Vertical / horizontal recess mounted with rear air intake
ESTRO GT FF Vertical / horizontal recess mounted with front air intake

Thanks to the high efficiency and reliability guaranteed GreenTech technology, ESTRO GT reduces operating and maintenance costs while maintaining a top level of comfort and minimal noise.

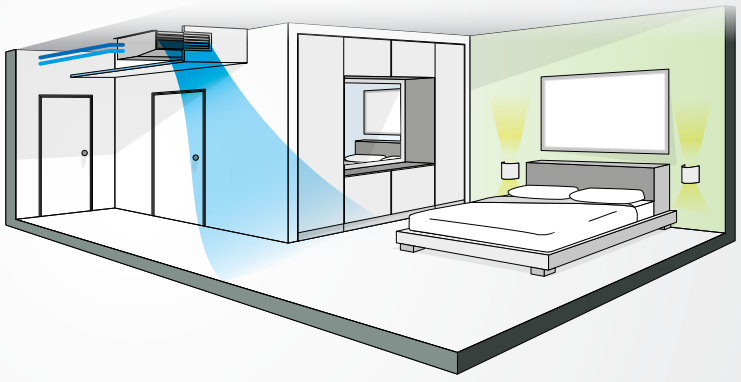



MAIN COMPONENTS

Cabinet

Composed of a painted steel sheet panel, side panels, air outlet grille (swinging by 180°) and back suction grille built from ABS.

Structure

Built from galvanised steel sheet of extra thickness, heat and sound insulated by means of Class 1 self-extinguishing panels. FU – FC – FF versions are suitable for either vertical or horizontal installation thanks to the dual condensate collection and drainage system.

Heat exchanger

High efficiency heat exchanger made with copper piping and aluminium fins, provided with brass manifolds and vent valve. The water connections are reversible at the time of installation. On request it is possible to mount an additional heat exchanger for 4-pipe systems.

Air filter

Honey-comb polypropylene washable air filter, easily removable for maintenance operations. On FU version the air filters are fitted onto the air inlet grille.

Electric fan with GreenTech BLDC motor

ESTRO GT uses the exclusive GreenTech technology of EBM-PAPST. Permanent magnet BLDC motor with inverter integrated in the fan assembly, protection rating IP44, insulation class F and ball bearings. Polypropylene (PP) volute. Centrifugal fan with forward-curving blades made of glass-filled polyamide PA 6. Conformity with 2017 ErP Directive.



ACCESSORIES

Wall-mounted microprocessor electronic control panels	
MCLE	MYCOMFORT LARGE electronic controller with display
KBE	Mycomfort on-board installation kit
DIST	Mycomfort controller spacer for wall mounting
MCSWE	Water sensor for EVO, MYCOMFORT and LED503 controller
MCSUE	Humidity sensor for EVO, MYCOMFORT MEDIUM and LARGE controller
EVODISP	EVO CLOCK Remote display
EVOBOARD	EVO 230V circuit board
Power interface and regulating louver controllers	
CSB	On-board controller for opening and closing the motor-driven regulating louver
CSD	Recess mounted controller for opening and closing the SM motor-driven regulating louver
Additional heat exchanger for 4-pipe systems	
DF	1-row additional heat exchanger for 4-pipe systems (not suitable for "M" models)
Auxiliary water drip trays, insulating shell, condensate drainage pump	
BV	Auxiliary water drip tray for vertical installation fan coil units
BH	Auxiliary water drip tray for horizontal installation fan coil units
GIVKR	Insulating shell for VK1S valve, water connections on the right
GIVKL	Insulating shell for VK1S valve, water connections on the left
KSC	Condensate drain kit
Support and covering elements	
ZL	Pair of support covering elements for Estro FL GT
ZLG	Pair of support covering elements with front grille for Estro FL GT
ZA	Pair of support covering elements for Estro FA GT
ZAG	Pair of support covering elements with front grille for Estro FA GT
ZC	Pair of support covering elements for Estro CL GT
ZCG	Pair of support covering elements with front grille for Estro CL GT
D	Supports for Estro FC GT
Rear covering panels	
PV	Painted rear panel for vertical installation models with cabinet
PH	Painted rear panel for horizontal installation models with cabinet
Grilles	
GE+C	Aluminium external air intake grille, with subframe
GEF+C	Aluminium external air intake grille, with subframe and air filter
GM+C	Aluminium air outlet grille with 2-row fins and subframe
RGC	Plenum with circular collars for air outlet grille

Plenum and connectors	
RM90	Angular outlet connector
RM90C	Angular outlet insulated connector
RMD	Straight outlet connector
RMCD	Straight outlet insulated connector
RA90	Angular inlet connector
RAD	Straight inlet connector
RMCD C	Air outlet plenum with circular collars
RAD C	Air inlet plenum with circular collars
External air intake louvers	
S	Manual external air intake louver
SM	Motor-driven louver, with motor on the right with transformer
SM	Motor driven louver, with motor on the left, with transformer
SMC	Motor driven louver, with motor on the right, for centralised control
SMC	Motor driven louver, with motor on the left, for centralised control
Valves	
VK	3-way valve, 230V actuator, hydraulic kit for standard heat exchanger
	3-way valve, 230V actuator, hydraulic kit for DF heat exchanger
	3-way valve, 24V actuator, hydraulic kit for standard heat exchanger
	3-way valve, 24V actuator, hydraulic kit for DF heat exchanger
VKM	3-way valve, modulating actuator, hydraulic kit for standard heat exchanger
	3-way valve, modulating actuator, hydraulic kit for DF heat exchanger
VK	3-way valve, 230V actuator, hydraulic kit on heat exchanger side for standard heat exchanger
	3-way valve, 230V actuator, hydraulic kit on heat exchanger side for DF heat exchanger
	3-way valve, 24V actuator, hydraulic kit on heat exchanger side for standard heat exchanger
	3-way valve, 24V actuator, hydraulic kit on heat exchanger side for DF heat exchanger
VKM	3-way valve, modulating actuator, hydraulic kit on heat exchanger side for standard heat exchanger
	3-way valve, modulating actuator, hydraulic kit on heat exchanger side for DF heat exchanger
KV	2-way valve, 230V actuator, hydraulic kit on water connection side for standard heat exchanger
	2-way valve, 230V actuators, hydraulic kit on water connection side for standard and DF heat exchanger
	2-way valve, 24V actuator, hydraulic kit on water connection side for standard heat exchanger
	2-way valve, 24V actuator, hydraulic kit on water connection side for standard and DF heat exchanger
KVM	2-way valve, modulating actuator, hydraulic kit on water connection side for standard heat exchanger
	2-way valve, modulating actuator hydraulic kit on water connection side for standard and DF heat exchanger

Rated technical data

ESTRO GT		1			3			4			4M		
Fan speed		min	med	max	min	med	max	min	med	max	min	med	max
Total cooling capacity (1) (E)	kW	0,83	0,98	1,12	1,24	1,48	1,74	1,36	1,64	1,94	1,50	1,85	2,24
Sensible cooling capacity (1) (E)	kW	0,63	0,75	0,85	0,93	1,11	1,30	1,00	1,21	1,44	1,06	1,32	1,60
Water flow(1)	l/h	142	168	193	213	254	298	234	282	333	258	317	384
Water pressure drop (1) (E)	kPa	4	6	7	8	11	14	6	9	12	10	14	20
Heating capacity (2) (E)	kW	1,13	1,34	1,53	1,63	1,94	2,27	1,78	2,15	2,55	1,86	2,26	2,74
Water pressure drop (2) (E)	kPa	3	5	6	8	9	12	5	7	10	11	11	16
Heating capacity (3)	kW	1,97	2,32	2,65	2,79	3,33	3,89	3,04	3,67	4,35	3,08	3,80	4,62
Water flow (3)	l/h	172	205	230	245	292	341	267	322	382	270	333	405
Water pressure drop (3)	kPa	4	6	7	8	11	14	6	8	11	8	12	16
Air flow	m^3/h	149	189	231	211	271	344	211	271	344	211	271	344
Power imput (E)	W	5	6	8	7	10	16	7	10	16	7	10	16
Sound power level (4) (E)	dB/A	26	32	38	36	43	49	37	44	50	37	44	50
Additional coil heating capacity (3) (E)	kW	1,34	1,52	1,69	1,60	1,81	2,03	1,58	1,79	2,00	not available		
Water flow (3)	l/h	118	134	148	141	159	178	139	157	175	not available		
Water pressure drop (3) (E)	kPa	3	4	4	6	7	8	5	6	7	not available		

ESTRO GT		5			6			6M			7		
Fan speed		min	med	max	min	med	max	min	med	max	min	med	max
Total cooling capacity (1) (E)	kW	1,55	2,02	2,42	1,76	2,40	2,97	1,93	2,64	3,29	1,97	2,63	3,42
Sensible cooling capacity (1) (E)	kW	1,17	1,57	1,93	1,26	1,73	2,15	1,33	1,83	2,30	1,51	2,04	2,72
Water flow(1)	l/h	266	347	415	302	412	510	331	453	565	338	451	587
Water pressure drop (1) (E)	kPa	7	12	16	5	8	12	7	12	17	4	7	12
Heating capacity (2) (E)	kW	2,05	2,67	3,20	2,28	3,09	3,83	2,33	3,21	4,04	2,80	3,69	4,76
Water pressure drop (2) (E)	kPa	6	10	13	4	7	9	6	10	14	4	6	9
Heating capacity (3)	kW	3,50	4,56	5,47	3,86	5,24	6,48	3,91	5,39	6,79	4,82	6,34	8,21
Water flow (3)	l/h	307	400	480	339	459	569	343	473	595	423	556	720
Water pressure drop (3)	kPa	7	12	16	4	7	11	6	10	14	5	8	13
Air flow	m^3/h	241	341	442	241	341	442	241	341	442	320	450	640
Power imput (E)	W	5	9	14	5	9	14	5	9	14	6	9	19
Sound power level (4) (E)	dB/A	32	42	48	33	42	48	33	42	48	35	43	51
Additional coil heating capacity (3) (E)	kW	2,11	2,56	2,91	2,22	2,68	3,05	not available			3,28	3,99	4,80
Water flow (3)	l/h	185	224	255	193	235	267	not available			288	350	421
Water pressure drop (3) (E)	kPa	3	4	4	3	4	5	not available			4	6	9

(1) Water temperature 7-12°C, air temperature D.B. 27°C, W.B. 19°C (47% relative humidity)
(2) Inlet water temperature 50°C, water flow rate same as in cooling mode, air temperature 20°C
(3) Water temperature 70 / 60°C, air temperature 20°C
(4) Sound power measured according to standards ISO 3741 and ISO 3742
(E) EUROVENT certified data



Rated technical data

ESTRO GT		7M			8			8M			9		
Fan speed		min	med	max	min	med	max	min	med	max	min	med	max
Total cooling capacity (1) (E)	kW	2,48	3,39	4,58	2,46	3,27	4,30	2,78	3,70	4,96	3,17	3,89	4,74
Sensible cooling capacity (1) (E)	kW	1,73	2,37	3,22	1,80	2,38	3,13	1,94	2,59	3,50	2,32	2,87	3,53
Water flow(1)	l/h	427	582	785	423	561	738	477	635	850	544	668	813
Water pressure drop (1) (E)	kPa	6	11	18	5	8	12	7	12	20	7	10	14
Heating capacity (2) (E)	kW	3,01	4,08	5,49	3,07	3,93	5,02	3,36	4,45	5,9	4,02	4,88	5,87
Water pressure drop (2) (E)	kPa	5	9	14	4	6	10	6	10	17	6	8	12
Heating capacity (3)	kW	5,06	6,84	9,22	5,21	6,62	8,42	5,64	7,46	9,98	6,81	8,25	9,93
Water flow (3)	l/h	444	601	808	457	581	739	495	654	876	597	724	871
Water pressure drop (3)	kPa	5	8	14	4	6	9	6	10	16	6	9	12
Air flow	m^3/h	320	450	640	361	497	706	361	497	706	470	605	785
Power imput (E)	W	6	9	19	7	11	24	7	11	24	10	17	32
Sound power level (4) (E)	dB/A	35	43	51	35	43	53	35	43	53	43	49	56
Additional coil heating capacity (3) (E)	kW	not available			3,56	4,26	5,11	not available			4,09	4,67	5,31
Water flow (3)	l/h	not available			312	374	448	not available			359	410	466
Water pressure drop (3) (E)	kPa	not available			7	9	13	not available			6	8	10

ESTRO GT		9M		
Fan speed		min	med	max
Total cooling capacity (1) (E)	kW	3,52	4,37	5,40
Sensible cooling capacity (1) (E)	kW	2,47	3,07	3,82
Water flow(1)	l/h	605	750	926
Water pressure drop (1) (E)	kPa	11	16	24
Heating capacity (2) (E)	kW	4,24	5,24	6,5
Water pressure drop (2) (E)	kPa	9	13	19
Heating capacity (3)	kW	7,11	8,79	10,87
Water flow (3)	l/h	623	772	953
Water pressure drop (3)	kPa	9	13	19
Air flow	m^3/h	470	605	785
Power imput (E)	W	10	17	32
Sound power level (4) (E)	dB/A	43	49	56
Additional coil heating capacity (3) (E)	kW	not available		
Water flow (3)	l/h	not available		
Water pressure drop (3) (E)	kPa	not available		

(1) Water temperature 7-12°C, air temperature D.B. 27°C, W.B. 19°C (47% relative humidity)
(2) Inlet water temperature 50°C, water flow rate same as in cooling mode, air temperature 20°C
(3) Water temperature 70 / 60°C, air temperature 20°C
(4) Sound power measured according to standards ISO 3741 and ISO 3742
(E) EUROVENT certified data

Dimensional drawings

ESTRO GT FL - CL

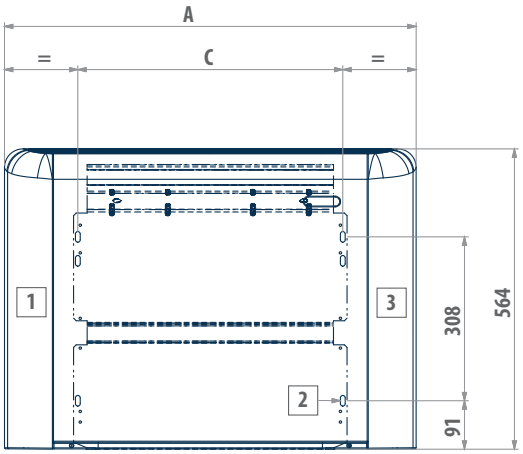

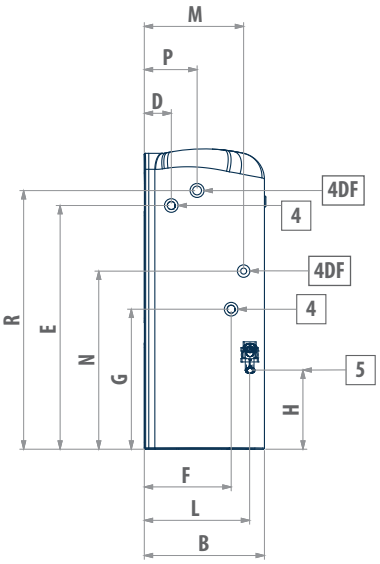

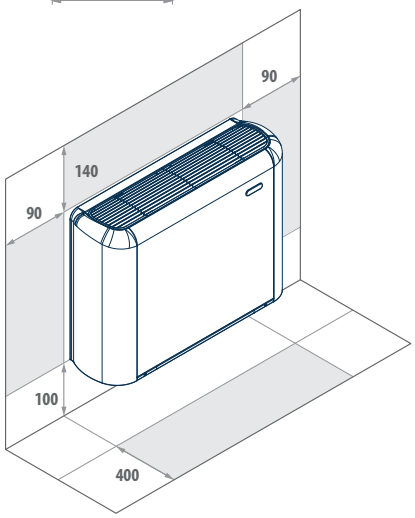

LEGEND	
1	Usable space for plumbing connections
2	Slots for installation on the wall
3	Usable space for electrical connections
4	Standard heat exchanger water connections
4DF	DF 1-row DF additional heat exchanger water connections
5	Condensate drainage

ESTRO GT FL	ESTRO GT CL	A	B	C	D	E	F	G	H	L	M	N	P	R	4	4DF	5
1 - 4M	1 - 4M	774	226	498	51	458	163	263	149	198	187	335	99	486	1 / 2"	1 / 2"	16
5 - 6M	5 - 6M	984	226	708	51	458	163	263	149	198	187	335	99	486	1 / 2"	1 / 2"	16
7 - 9M	7 - 9M	1194	226	918	51	458	163	263	149	198	187	335	99	486	1 / 2"	1 / 2"	16



Dimensional drawings

ESTRO GT FA

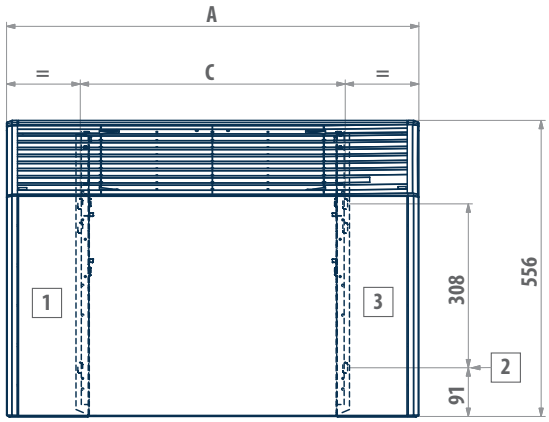

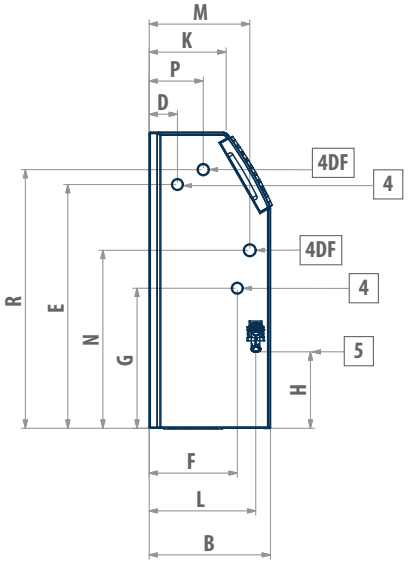

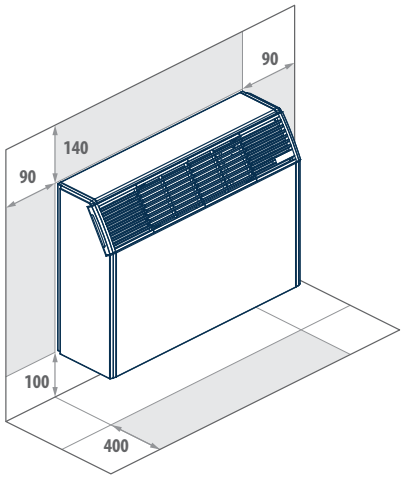

LEGEND	
1	Usable space for plumbing connections
2	Slots for installation on the wall
3	Usable space for electrical connections
4	Standard heat exchanger water connections
4DF	DF 1-row DF additional heat exchanger water connections
5	Condensate drainage

ESTRO GT FA	A	B	C	D	E	F	G	H	K	L	M	N	P	R	4	4DF	5
1 - 4M	774	228	498	53	458	166	263	149	145	198	187	335	99	486	1 / 2"	1 / 2"	16
5 - 6M	984	228	708	53	458	166	263	149	145	198	187	335	99	486	1 / 2"	1 / 2"	16
7 - 9M	1194	228	918	53	458	166	263	149	145	198	187	335	99	486	1 / 2"	1 / 2"	16

Dimensional drawings

ESTRO GT FU

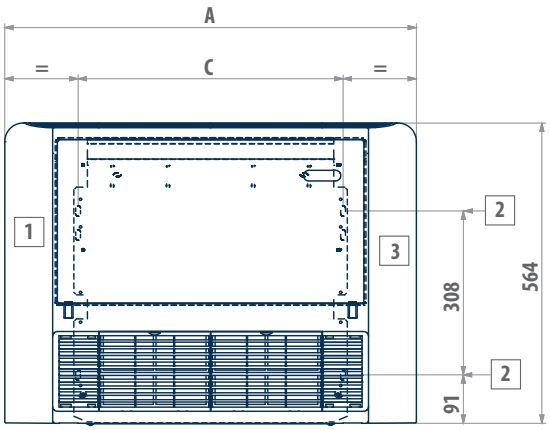

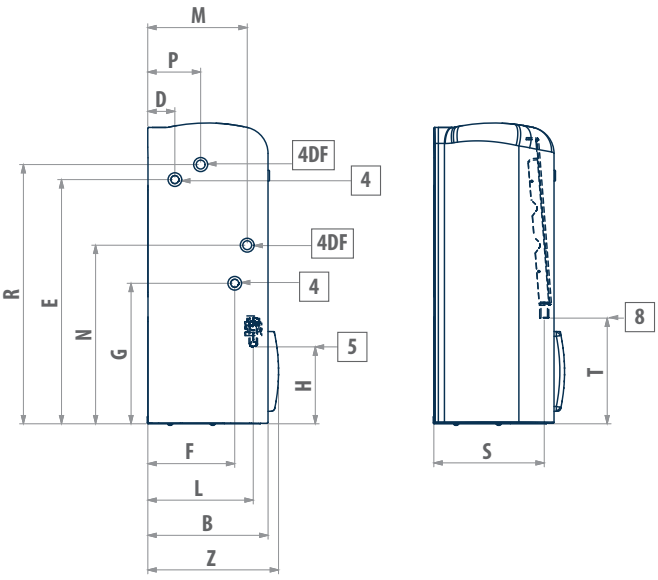

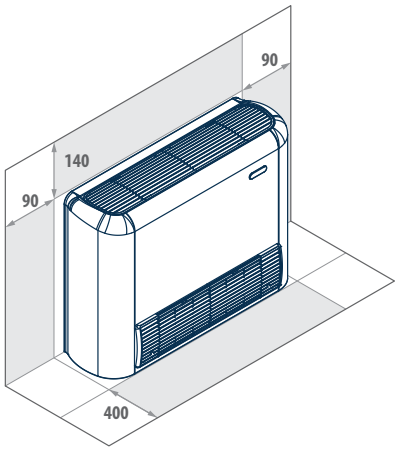

LEGEND	
1	Usable space for plumbing connections
2	Slots for installation on the wall
3	Usable space for electrical connections
4	Standard heat exchanger water connections
4DF	DF 1-row DF additional heat exchanger water connections
5	Condensate drainage

ESTRO GT FU	A	B	C	D	E	F	G	H	L	M	N	P	R	S	T	Z	4	4DF	5
1 - 4M	774	226	498	51	458	163	263	149	198	187	335	99	486	208	198	246	1 / 2"	1 / 2"	16
5 - 6M	984	226	708	51	458	163	263	149	198	187	335	99	486	208	198	246	1 / 2"	1 / 2"	16
7 - 9M	1194	226	918	51	458	163	263	149	198	187	335	99	486	208	198	246	1 / 2"	1 / 2"	16



Dimensional drawings

ESTRO GT FP

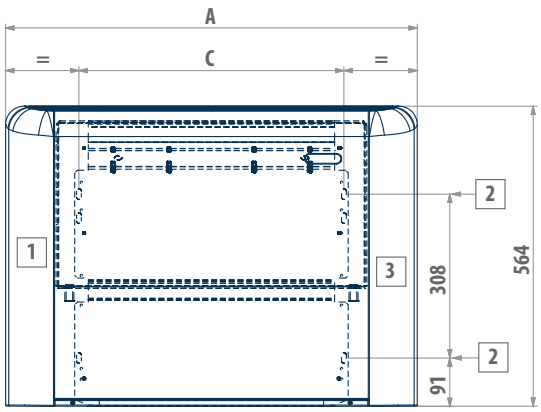

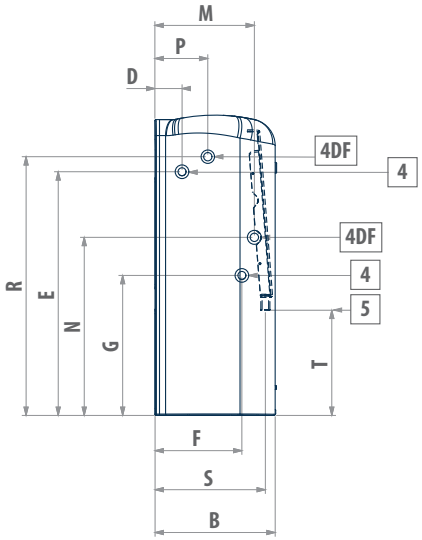

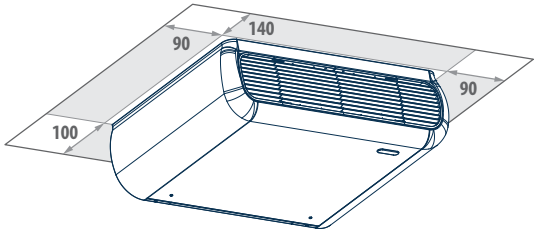

LEGEND

1	Usable space for plumbing connections
2	Slots for installation on the wall
3	Usable space for electrical connections
4	Standard heat exchanger water connections
4DF	DF 1-row DF additional heat exchanger water connections
5	Condensate drainage

ESTRO GT FP	A	B	C	D	E	F	G	M	N	P	R	S	T	4	4DF	5
1 - 4M	774	226	498	51	458	163	263	187	335	99	486	208	198	1 / 2"	1 / 2"	16
5 - 6M	984	226	708	51	458	163	263	187	335	99	486	208	198	1 / 2"	1 / 2"	16
7 - 9M	1194	226	918	51	458	163	263	187	335	99	486	208	198	1 / 2"	1 / 2"	16

Dimensional drawings

ESTRO GT FC

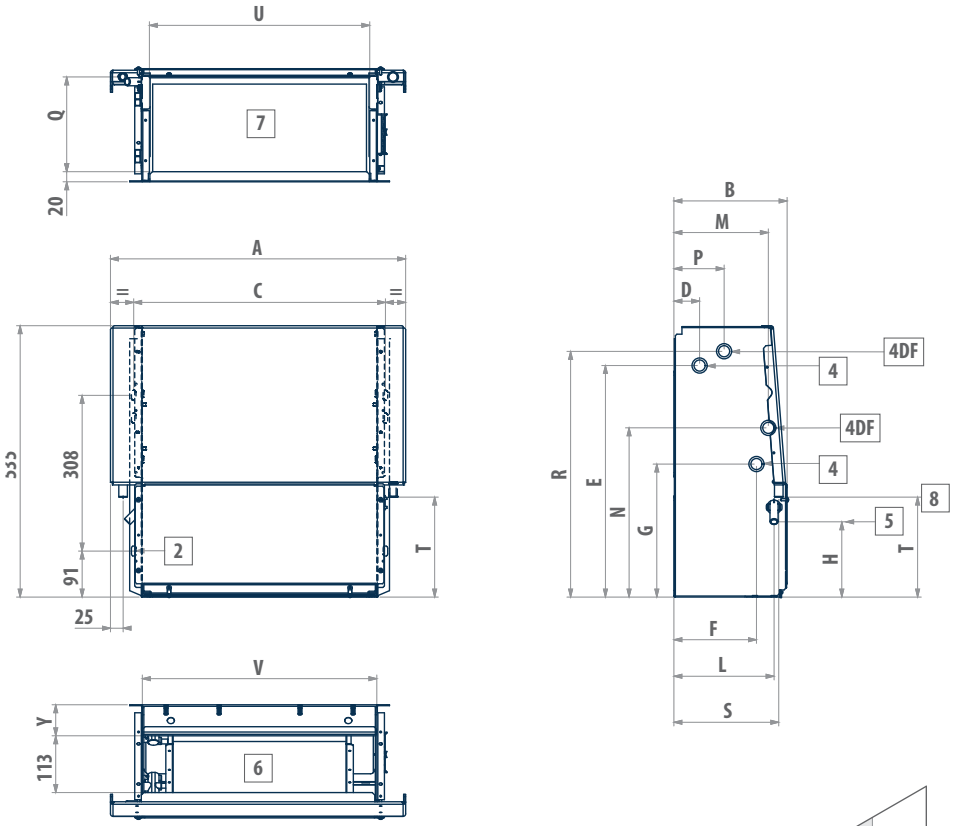

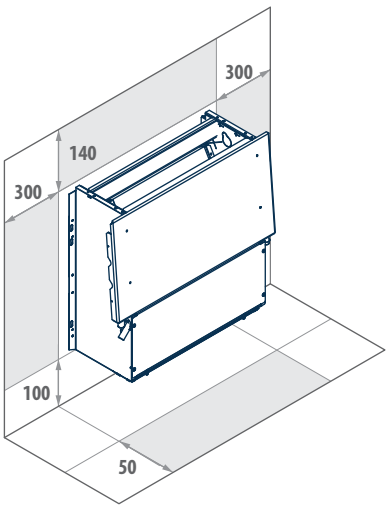

LEGEND	
2	Slots for installation on the wall
4	Standard heat exchanger water connections
4DF	DF 1-row DF additional heat exchanger water connections
5	Condensate drainage
6	Air outlet
7	Air intake

ESTRO GT FC	A	B	C	D	E	F	G	H	L	M	N	P	Q	R	S	T	U	V	Y	4	4DF	5
1 - 4M	584	224	498	51	458	163	263	149	198	187	335	99	189	486	208	198	436	464	61	1 / 2"	1 / 2"	16
5 - 6M	794	224	708	51	458	163	263	149	198	187	335	99	189	486	208	198	646	674	61	1 / 2"	1 / 2"	16
7 - 9M	1004	224	918	51	458	163	263	149	198	187	335	99	189	486	208	198	856	884	61	1 / 2"	1 / 2"	16



Dimensional drawings

ESTRO GT FF

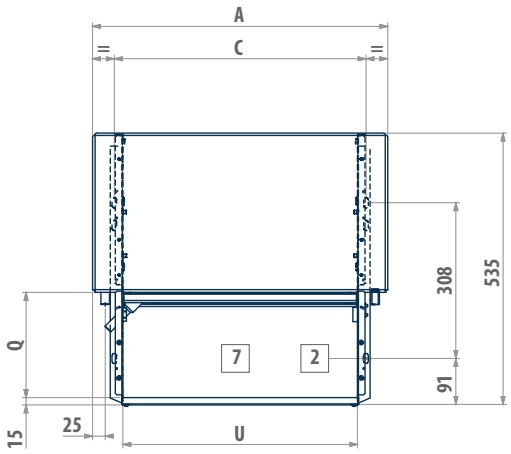

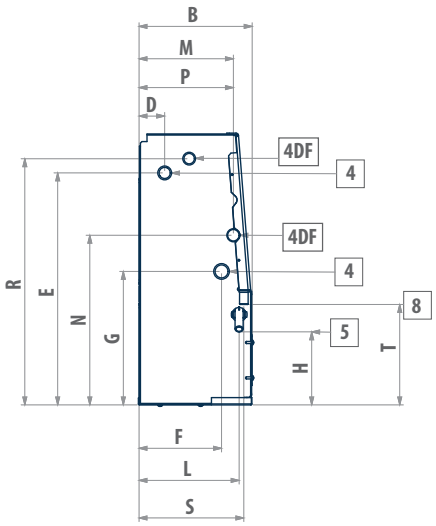

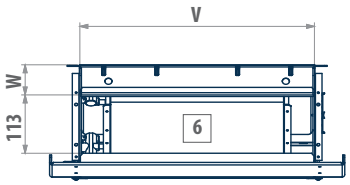

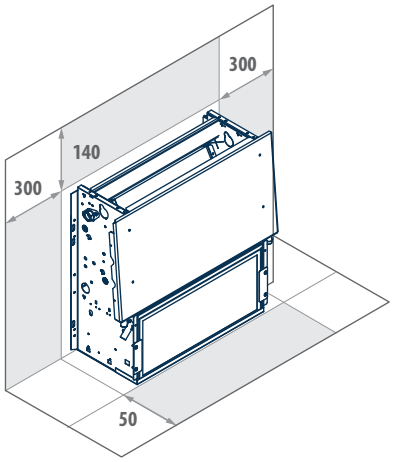

LEGEND	
2	Slots for installation on the wall
4	Standard heat exchanger water connections
4DF	DF 1-row DF additional heat exchanger water connections
5	Condensate drainage
6	Air outlet
7	Air intake

ESTRO GT FF	A	B	C	D	E	F	G	H	L	M	N	P	Q	R	S	T	U	V	Y	4	4DF	5
1 - 4M	584	224	498	51	458	163	263	149	198	187	335	99	189	486	208	198	436	464	61	1 / 2"	1 / 2"	16
5 - 6M	794	224	708	51	458	163	263	149	198	187	335	99	189	486	208	198	646	674	61	1 / 2"	1 / 2"	16
7 - 9M	1004	224	918	51	458	163	263	149	198	187	335	99	189	486	208	198	856	884	61	1 / 2"	1 / 2"	16

Design fan coil units with centrifugal fan

FLAT 2 - 5 kW





ERGO Supervision | 2-pipe system | 4-pipe system | Vertical installation | Horizontal installation | Centrifugal fan

Galletti Flat: performance and design in a single indoor unit

FLAT by Galletti has been engineered to offer performance and design features placing it at the top of its category.
The uniqueness of FLAT lies both in the use of extremely high quality materials - which contribute to making this product exceptionally robust - and the assurance of constant performance over time.
FLAT optimizes the distribution of air in the room thanks to the integrated air outlet grille which makes it possible to direct the treated, filtered air in 4 directions. The main flap is equipped with a microswitch which shuts off the fan and the valves when the flap closes. The flap is useful for avoiding dust build-up in periods of non-use.
The adoption of UV-stabilized ABS in the parts making up the cabinet and antistatic ABS in the fan assembly (volute and centrifugal fan) guarantee that the product will maintain the same aesthetics and noise levels throughout its lifetime.
Particular care has been taken in the design of the fan drive assembly, which guarantees exceptionally quiet operation both in versions with 3-speed and 6-speed motors.
The conception underlying its construction makes it possible to combine models for vertical and horizontal installation: 2 versions enable FLAT to be installed on the floor, wall and ceiling.

PLUS

- Cabinet with a refined design
- Air outlet flap w/microswitch
- Use of UV-stabilized ABS
- Reversible water connections
- 3 or 6-speed motors
- ABS centrifugal fans
- Can be integrated into the ERGO
- Incorporable ioniser



AVAILABLE VERSIONS



FLAT L
Suspended wall installation, with cabinet, with vertical air flow.



FLAT U
Floor or ceiling mounted, with cabinet, with vertical air flow and air intake grille complete with filters.



MAIN COMPONENTS

Cabinet

RAL9010 colour, front panel made of sheet steel. Side panels and an upper grille with covers on either side manufactured from UV-stabilised ABS to maintain the colour intact over time. The upper grille consists of a flap and adjustable louvers. The flap features a microswitch that automatically shuts down the unit when the flap itself is closed.



Structure

Built from galvanised steel sheet of extra thickness, heat and sound insulated by means of Class 1 self-extinguishing panels. FLAT U version is suitable for either vertical or horizontal installation thanks to the dual condensate collection and drainage system.

Heat exchanger

High efficiency heat exchanger made with copper piping and aluminium fins, provided with brass manifolds and vent valve. The water connections are reversible at the time of installation. On request it is possible to mount an additional heat exchanger for 4-pipe systems.

Fans

Double suction centrifugal fans, statically and dynamically balanced, manufactured from anti-static ABS, with blades having an airfoil section and offset modules. The fans are housed in a low-noise ABS volute with high-efficiency profile.

Electric motor

It is mounted on vibration dampers, with permanently activated capacitor and thermal protection of the windings, and is directly coupled with the fans. It is available as either a 3- or 6-speed version in order to meet all the specific needs of performance, quietness, and power consumption.



Air filter

Honey-comb polypropylene washable air filter, easily removable for maintenance operations. On FLAT U version the air filters are fitted onto the air inlet grille.

ACCESSORIES

Electromechanical control panels	
CB	On-board speed switch
TIB	Electromechanical controller, complete with speed selector, thermostat and summer/winter selecting switch
TC	Electromechanical thermostat for minimum water temperature in heating mode, mounted on the heat exchanger
CD	Recess wall-mounted speed selector
CDE	Wall-mounted speed selector
TD	Wall-mounted electromechanical controller, complete with speed selector, thermostat and summer/winter selecting switch.
TDC	Wall-mounted electromechanical controller, complete with speed selector and thermostat.
TD4T	Wall-mounted electromechanical controller, complete with speed selector, thermostat and summer/winter selecting switch for control of the fan coil and ON/OFF valves.
Wall-mounted microprocessor electronic control panels	
MCBE	MYCOMFORT BASE electronic controller with display
MCME	MYCOMFORT MEDIUM electronic controller with display
MCLE	MYCOMFORT LARGE electronic controller with display
EVO	Wall-mounted microprocessor controller
KBFLAE	FLAT on-board installation kit
MCSWE	Water sensor for MYCOMFORT BASE, MEDIUM, LARGE, LED503 and EVO microprocessor controllers
MCSUE	Remote humidity sensor for EVO, MYCOMFORT MEDIUM and LARGE on-board controllers
LED503	Recess wall-mounted microprocessor controller

Power interface	
KP	Power interface for connecting in parallel up to 4 fan coils to one controller
Additional heat exchanger for 4-pipe systems	
DF	1 row additional heat exchanger for 4-pipe systems (hot water circuit)
Base supports and enclosing panels	
ZL	Pair of base and enclosure elements
PV	Rear pre-painted panel for vertical installation fan coils with cabinet
PH	Rear pre-painted panel for horizontal installation fan coils with cabinet
Valves	
KVK	2 or 3-way valve with ON/OFF or modulating electrothermal motor and hydraulic kit for standard heat exchanger
VKDF	2 or 3-way valve with ON/OFF or modulating electrothermal motor and hydraulic kit for DF heat exchanger
Auxiliary water drip trays, insulating shell	
BV	Auxiliary water drip tray for vertical installation fan coil units
BH	Auxiliary water drip tray for horizontal installation fan coil units
GIVK	Valve insulation shell

Rated technical data

FLAT		10			20			30			40		
Fan speed		min	med	max	min	med	max	min	med	max	min	med	max
Total cooling capacity (1) (E)	kW	1,30	1,46	1,93	1,39	1,74	2,27	1,47	2,04	2,71	1,69	2,32	2,92
Sensible cooling capacity (1) (E)	kW	0,95	1,06	1,40	1,04	1,32	1,72	1,12	1,57	2,09	1,30	1,79	2,25
Water flow (1)	l/h	223	252	331	239	299	389	252	349	464	292	400	500
Water pressure drop (1) (E)	kPa	5	6	10	6	8	13	3	4	7	4	6	10
Heating capacity (2) (E)	kW	1,57	1,75	2,31	1,81	2,19	2,86	1,85	2,46	3,27	2,10	2,78	3,48
Water pressure drop (2) (E)	kPa	4	5	9	5	7	11	2	4	6	3	5	8
Heating capacity (3)	kW	2,64	2,95	3,89	3,07	3,71	4,84	3,15	4,16	5,51	3,58	4,70	5,86
Water flow (3)	l/h	230	259	342	270	328	425	277	364	482	313	414	515
Water pressure drop (3)	kPa	4	5	8	5	7	12	2	4	6	3	5	8
Air flow	m^3/h	197	226	305	216	284	378	240	344	467	283	407	520
Power input (E)	W	19	23	33	25	38	57	28	43	57	29	45	60
Sound power level (4) (E)	dB/A	32	36	44	38	44	50	30	38	44	33	42	48
Additional coil heating capacity (3) (E)	kW	1,54	1,66	2,01	1,64	1,88	2,24	2,02	2,42	2,95	2,22	2,67	3,11
Water flow (3)	l/h	137	144	176	144	166	198	176	212	259	194	234	274
Water pressure drop (3) (E)	kPa	4	4	6	4	5	7	8	11	15	9	13	17

FLAT		50			60			70		
Fan speed		min	med	max	min	med	max	min	med	max
Total cooling capacity (1) (E)	kW	2,08	2,61	3,32	2,24	2,97	4,16	2,56	3,35	4,46
Sensible cooling capacity (1) (E)	kW	1,65	2,06	2,60	1,80	2,39	3,37	2,08	2,75	3,70
Water flow (1)	l/h	356	446	569	356	446,4	569	439	576	767
Water pressure drop (1) (E)	kPa	3	4	6	3	5	8	4	6	11
Heating capacity (2) (E)	kW	2,67	3,20	4,03	3,10	3,97	5,47	3,49	4,44	5,88
Water pressure drop (2) (E)	kPa	2	3	5	2	4	7	3	5	9
Heating capacity (3)	kW	4,57	5,43	6,82	5,37	6,81	9,35	6,03	7,61	10,1
Water flow (3)	l/h	400	475	598	400	475	598	529	666	882
Water pressure drop (3)	kPa	3	3	5	3	5	8	4	6	10
Air flow	m^3/h	370	466	593	406	552	800	482	659	911
Power input (E)	W	40	56	75	38	58	88	41	65	96
Sound power level (4) (E)	dB/A	36	42	50	42	48	56	43	51	58
Additional coil heating capacity (3) (E)	kW	2,92	3,28	3,84	3,09	3,60	4,47	3,41	3,96	4,77
Water flow (3)	l/h	256	288	338	256	288	338	299	346	418
Water pressure drop (3) (E)	kPa	3	3	4	3	4	5	3	4	6

(1) Water temperature 7-12°C, air temperature D.B. 27°C, W.B. 19°C (47% relative humidity)
(2) Inlet water temperature 50°C, water flow rate same as in cooling mode, air temperature 20°C
(3) Water temperature 70 / 60°C, air temperature 20°C
(4) Sound power measured according to standards ISO 3741 and ISO 3742
(E) EUROVENT certified data



Dimensional drawings

FLAT L

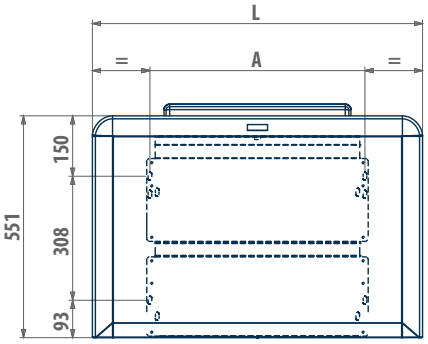

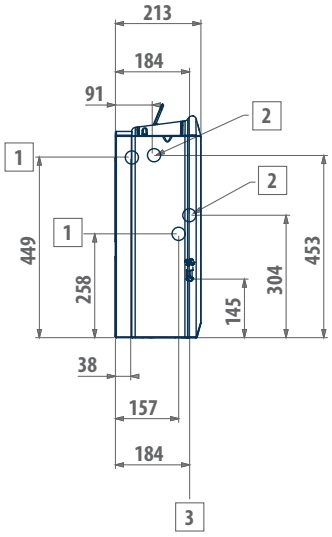

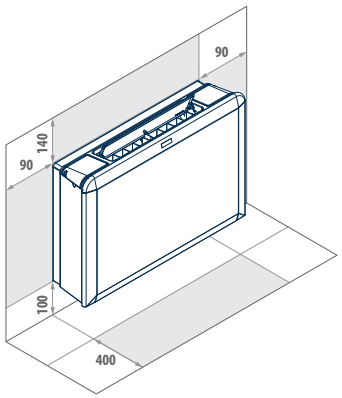

FLAT U

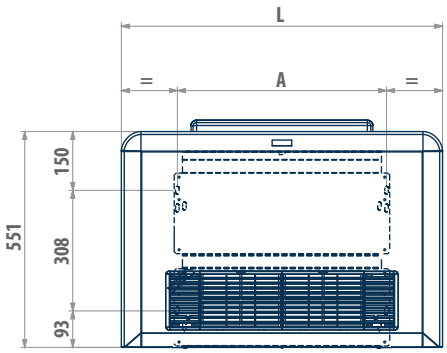

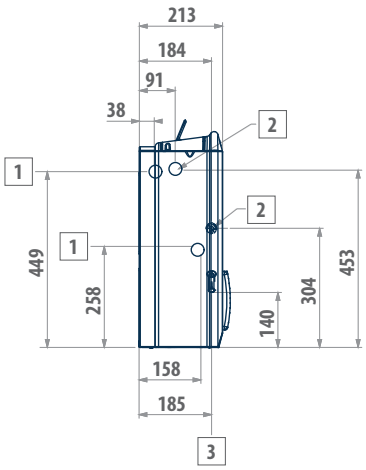

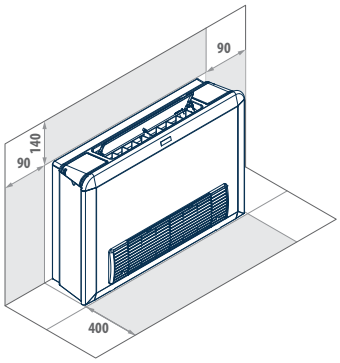

FLAT L - U	10	20	30	40	50	60	70
A	534	534	704	704	874	874	874
L	820	820	990	990	1160	1160	1160
1 - Water connections (female gas), standard heat exchanger	1/2"	1/2"	1/2"	1/2"	1/2"	1/2"	1/2"
2 - Water connections (female gas), DF heat exchanger	1/2"	1/2"	1/2"	1/2"	1/2"	1/2"	1/2"
3 - Drain outlet for vertical installation	16	16	16	16	16	16	16
Diameter of drain outlet for horizontal installation	17	17	17	17	17	17	17

Design fan coil unit with centrifugal fan and BLDC motor

FLAT i 2 - 5 kW





Brushless motor | 2-pipe system | 4-pipe system | Vertical installation | Horizontal installation | Centrifugal fan | ERGO Supervision

PLUS

- Inverter-controlled BLDC motor
- Low energy consumption
- Modulating operation
- ABS centrifugal fans
- Can be integrated into the ERGO
- UV-stabilized ABS cabinet with a refined design
- Air outlet flap w/microswitch
- Reversible water connections
- Incorporable ioniser

Technology and design in a single solution

Galletti FLAT hydronic indoor units are equipped with a permanent magnet (brushless) electric motor, controlled by an inverter, which enables continuous adjustment in the number of fan revolutions.
In addition to the important reduction in electricity consumption compared to AC motors, the use of inverter BLDC technology makes it possible to continually adjust the operation of the unit to the actual thermo-hygrometric load of the interior, with a clear benefit in terms of comfort and reducing noise.
Its use is particularly effective in the frequent cases of operation under partial load conditions, the situation that occurs most frequently, when the adjustment logic allows greatly reduced motor rotation speeds with exceptional reductions in electricity consumption and noise emissions.
The operation of the unit with brushless motor is managed by EVO or MYCOMFORT LARGE microprocessor control panel, using an analogue output (0-10V) which is connected to the inverter.
The Galletti brushless fan coil thus represent the state of the art due to the possibility of regulating the operation, depending on the temperature of the air, its relative humidity, the temperature of the water and based on the programmable time slots.

Bymeans of the digital outputs it is possible to switch on and off external units or devices such as chiller, boiler, pumps, water circulation pumps, etc.
Another analog output makes it possible to control the modulating valves.



AVAILABLE VERSIONS

3 models with cooling capacity from 2 to 5 kW, in two different versions:



FLAT i L
Suspended wall installation, with cabinet, with vertical air flow.



FLAT i U
Floor or ceiling mounted, with cabinet, with vertical air flow and air intake grille complete with filters.



MAIN COMPONENTS

Cabinet with a refined design

RAL9010 colour, front panel made of sheet steel. Side panels and an upper grille with covers on either side manufactured from UV-stabilised ABS to maintain the colour intact over time. The upper grille consists of a flap and adjustable louvers. The flap features a microswitch that automatically shuts down the unit when the flap itself is closed.



Structure

Built from galvanised steel sheet of extra thickness, heat and sound insulated by means of Class 1 self-extinguishing panels. FLAT Ui version is suitable for either vertical or horizontal installation thanks to the dual condensate collection and drainage system.

Heat exchanger

High efficiency heat exchanger made with copper piping and aluminium fins, provided with brass manifolds and vent valve. The water connections are reversible at the time of installation. On request it is possible to mount an additional heat exchanger for 4-pipe systems.

Fans

Double suction centrifugal fans, statically and dynamically balanced, manufactured from anti-static ABS, with blades having an airfoil section and offset modules. The fans are housed in a low-noise ABS volute with high-efficiency profile.

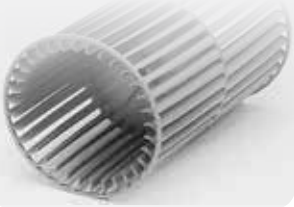

BLDC electric motor

The unit is equipped with an inverter board to control the motor, which can be used separately or installed on the motor itself. This system makes it possible to precisely set the maximum rotation speed of the motor (control signal 0-10 V) even when the maximum rotation speed must be controlled to reduce noise levels.



Air filter

Honey-comb polypropylene washable air filter, easily removable for maintenance operations. On FLAT Ui version the air filters are fitted onto the air inlet grille.

ACCESSORIES

Wall-mounted microprocessor electronic control panels	
MCLE	MYCOMFORT LARGE electronic controller with display
EVO	Wall-mounted microprocessor controller
KBFLAE	FLAT i on-board installation kit
MCSWE	Water sensor for MYCOMFORT and EVO microprocessor controllers
MCSUE	Remote humidity sensor for EVO, MYCOMFORT MEDIUM and LARGE on-board controllers
Additional heat exchanger for 4-pipe systems	
DF	1 row additional heat exchanger for 4-pipe systems (hot water circuit)
Base supports and enclosing panels	
ZL	Pair of base and enclosure elements
PV	Rear pre-painted panel for vertical installation fan coils with cabinet
PH	Rear pre-painted panel for horizontal installation fan coils with cabinet

Valves	
KVK	2 or 3-way valve with ON/OFF or modulating electrothermal motor and hydraulic kit for standard heat exchanger
VKDF	2 or 3-way valve with ON/OFF or modulating electrothermal motor and hydraulic kit for DF heat exchanger
Auxiliary water drip trays, insulating shell	
BV	Auxiliary water drip tray for vertical installation fan coil units
BH	Auxiliary water drip tray for horizontal installation fan coil units
GIVK	Valve body insulation shell

Rated technical data

FLAT i		20			40			70		
Fan speed		min	med	max	min	med	max	min	med	max
Total cooling capacity (1) (E)	kW	1,39	1,74	2,27	1,69	2,32	2,92	2,56	3,35	4,46
Sensible cooling capacity (1) (E)	kW	1,04	1,32	1,72	1,30	1,79	2,25	2,08	2,75	3,70
Water flow (1)	l/h	239	299	389	292	400	500	439	576	767
Water pressure drop (1) (E)	kPa	6	8	13	4	6	10	4	6	11
Heating capacity (2) (E)	kW	1,81	2,19	2,86	2,10	2,78	3,48	3,49	4,44	5,88
Water pressure drop (2) (E)	kPa	5	7	11	3	5	8	3	5	9
Heating capacity (3)	kW	3,07	3,71	4,84	3,58	4,7	5,86	6,03	7,61	10,1
Water flow (3)	l/h	270	328	425	313	414	515	529	666	882
Water pressure drop (3)	kPa	5	7	12	3	5	8	4	6	10
Air flow	m^3/h	216	284	378	283	407	520	482	659	911
Power input (E)	W	7	11	22	7	12	24	13	21	49
Sound power level (4) (E)	dB/A	38	44	50	33	42	48	43	51	58
Additional coil heating capacity (3) (E)	kW	1,64	1,88	2,24	2,22	2,67	3,11	3,41	3,96	4,77
Water flow (3)	l/h	144	166	198	194	234	274	299	346	418
Water pressure drop (3) (E)	kPa	4	5	7	9	13	17	3	4	6

(1) Water temperature 7-12°C, air temperature D.B. 27°C, W.B. 19°C (47% relative humidity)
(2) Inlet water temperature 50°C, water flow rate same as in cooling mode, air temperature 20°C
(3) Water temperature 70 / 60°C, air temperature 20°C
(4) Sound power measured according to standards ISO 3741 and ISO 3742
(E) EUROVENT certified data

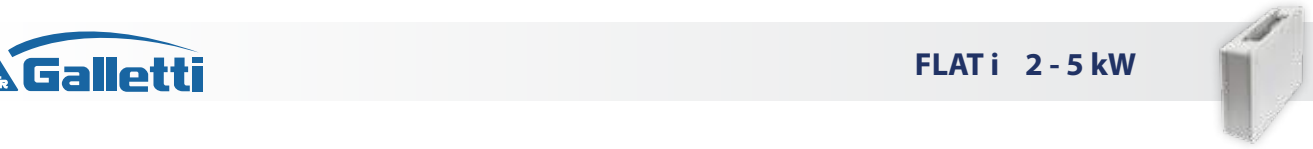

FLAT L i

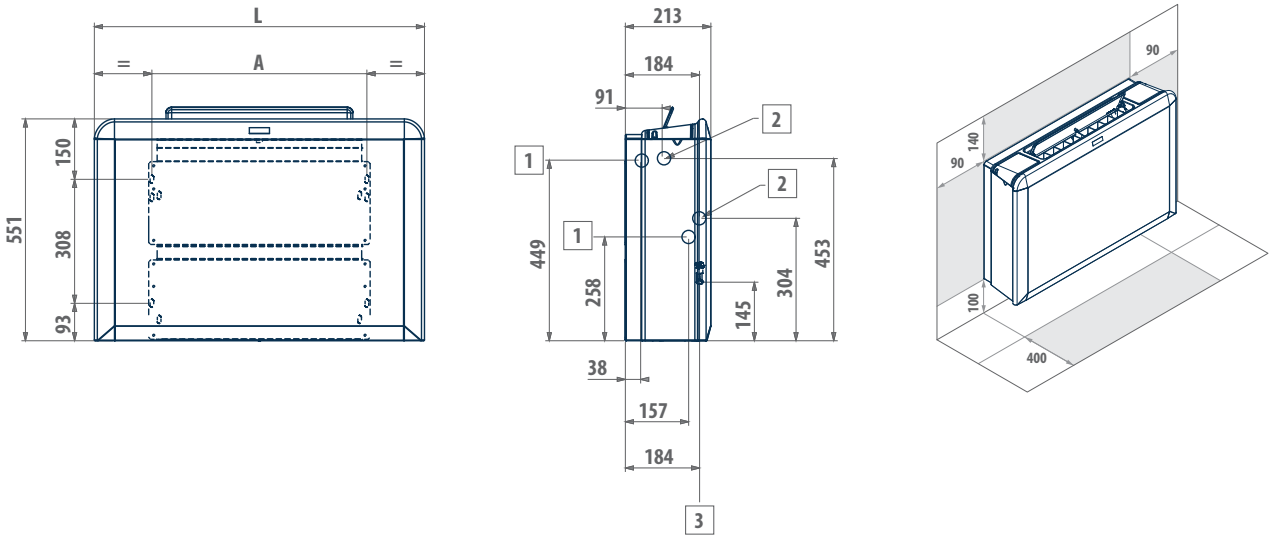

FLAT U i

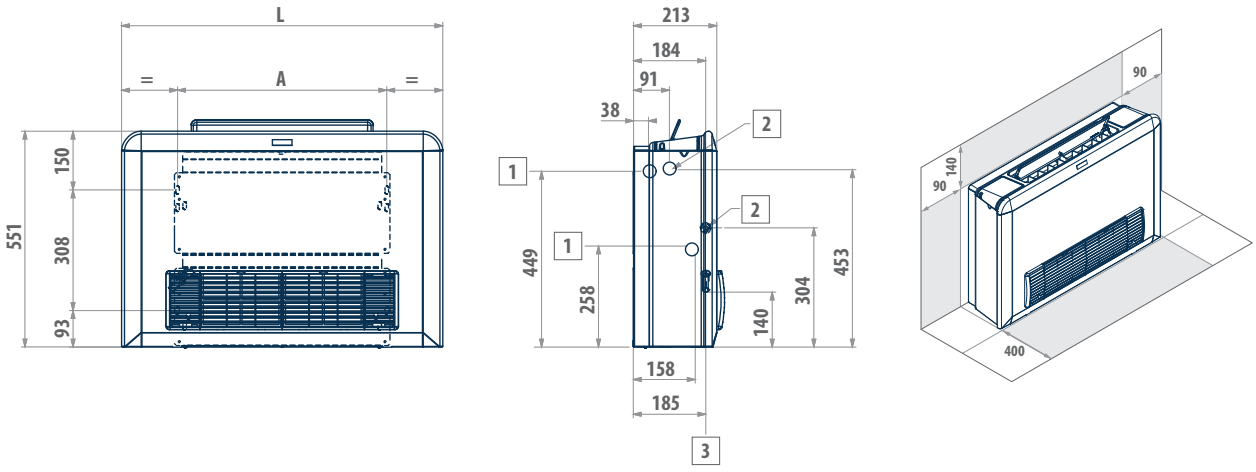

FLAT L - U i	20	40	70
A	534	704	874
L	820	990	1160
1 - Water connections (female gas), standard heat exchanger	1/2"	1/2"	1/2"
2 - Water connections (female gas), DF heat exchanger	1/2"	1/2"	1/2"
3 - Drain outlet for vertical installation	16	16	16
Diameter of drain outlet for horizontal installation	17	17	17

High wall-mounted fan coil units

FM 2 - 4 kW





Brushless motor | 2-pipe system | Tangential fan | High wall mounting | ERGO Supervision | Infrared remote controller

New Galletti hydronic indoor unit which combines quiet operation, a refined design and comfort control.

FM stands out for its advanced technological features, including a BLDC motor, incorporated adjustment valve and serial communication.
Automatic control of the fan speed is managed through a proportional, integrative and derivative logic capable of ensuring stability, precision and rapid intervention, respectively.
The serial communication enables the interaction of up to 32 units, thus guaranteeing a global management with automatic adjustment of the parameters on all units coordinated from a single point.
With the WALLPAD accessory it is possible to control the units connected in the system one by one.
FM can be interconnected with a supervision system with Modbus communication.
On the one hand the valve already installed on the unit and the system of hoses permits fast, safe installation, and on the other hand the BLDC fan motor technology and coil providing an optimized heat exchange offer the user a quiet, high-performance, energy efficient indoor unit.

PLUS

- Electronically controlled BLDC motor
- Compact dimensions, identical for the whole range
- Incorporated 2- or 3- way ON OFF Valves
- PID regulation
- Construction of global addressable networks with an external supervisor



AVAILABLE VERSIONS

23/33/43 models
These models are characterized by the presence of a 3-way valve installed on the unit which allows it to be integrated into any type of installation, in particular in the presence of ON OFF pumps.

22/32/42 models
The models with a 2-way valve already installed on them can be perfectly adapted to systems which include a modulating circulator or another means for varying the water flow.



MAIN COMPONENTS

Cabinet

The ABS cabinet features attractive design, for every type of environment.
The integrated air outlet is equipped with a motor driven flap that can sweep automatically or be positioned manually, and adjustable fins for a uniform distribution of air in the room.
The front panel is complete with display to show all the functions of the unit and the room temperature.

Heat exchanger

The finned block heat exchangers consist of copper tubing and aluminium fins.
The hydrophilic treatment on the fins assures an optimal heat exchange even in the presence of surface condensation.

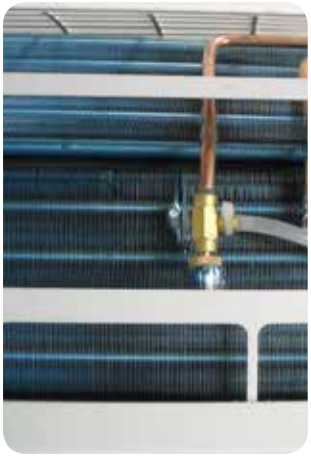

Valve assembly

Two- or three-way ON/OFF valves already wired and installed inside the indoor unit. The connection to the system is made with hoses located on the rear of the unit.
Without any increase in dimensions or complications in installation, the valve closes on reaching the set point, recirculating the flow of water and preventing it from entering the heat exchanger.

Remote control

Supplied as a standard feature, the infrared controller can be used to control a single indoor unit or a combined network and to program daily time slots.



BLDC motor

Permanent magnet electronic motor enabling continuous modulation of the fan speed with electricity consumption reduced by more than one half compared to asynchronous motors.

Fan

Low-noise tangential fan.

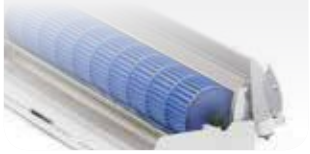

WALLPAD

The true strong point of this controller is tied to the development of communication networks. By connecting up to 32 units via a network bus and connecting the WALLPAD controller to one of them (Master) it is possible to control their operation.

In particular, the user can choose whether to communicate simultaneously with all of the connected units, for example to change the operating mode of the entire system, or dialogue with each individual unit, differentiating the settings between one fan coil and another. The selection of "global" communication or communication with a single indoor unit is made by simply pressing a button.

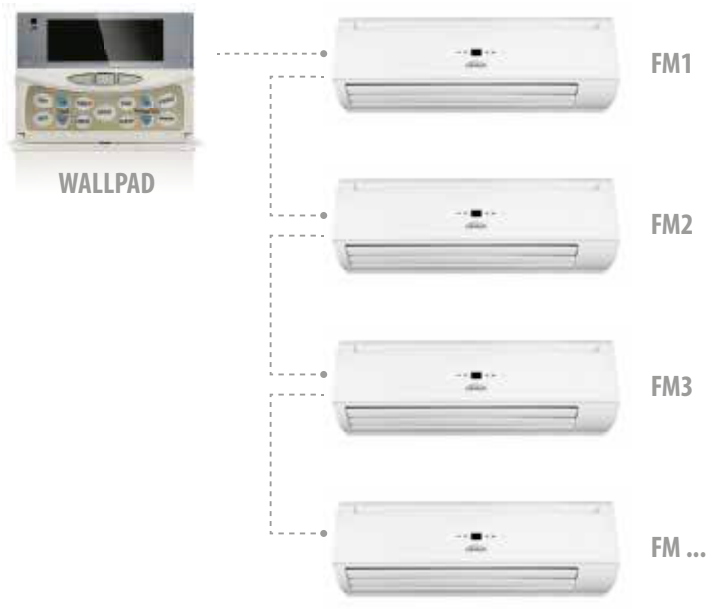

ACCESSORIES

WALLPAD	The wired controller, which may be mounted on the wall, enables advanced control of the hydronic indoor unit. In particular the controller provides the user with detailed information concerning the operating status of the unit at any given time, including temperature, set point, speed, operating mode, flap movement and a lot of other information. It also implements a weekly control of the time slots with an on/off timer.

Rated technical data

FM		22 / 23			32 / 33			42 / 43		
Power supply	V - ph - Hz	230-1-50 220-1-60								
Fan speed		min	med	max	min	med	max	min	med	max
Total cooling capacity (1) (E)	kW	1,37	1,64	2,07	1,87	2,48	3,03	2,67	3,28	3,74
Sensible cooling capacity (1) (E)	kW	1,00	1,20	1,52	1,35	1,81	2,22	1,94	2,40	2,74
Water flow rate (1)	l/h	234	281	355	333	413	518	459	564	642
Pressure drop (1) (E)	kPa	12	19	29	16	28	39	28	40	50
2/3-way valve pressure drop	kPa	2	3	5	5	6	11	11	17	22
Heating capacity (2) (E)	kW	1,72	2,08	2,64	2,34	3,14	3,85	3,37	4,17	4,77
Pressure drop (2) (E)	kPa	11	15	22	14	25	35	25	36	45
2/3-way valve pressure drop	kPa	2	3	5	5	6	11	11	16	21
Air flow rate	m^3/h	290	370	500	370	445	645	570	740	876
Power input (E)	W	10	13	18	10	15	22	13	20	30
Sound power level (3) (E)	dB/A	35	40	48	40	43	54	46	53	58

(1) Water temperature 7-12°C, air temperature D.B. 27°C, W.B. 19°C (47% relative humidity)
(2) Inlet water temperature 50°C, water flow rate same as in cooling mode, air temperature 20°C
(3) Sound power measured according to standards ISO 3741 and ISO 3742
(E) EUROVENT certified data



Dimensional drawings

FM

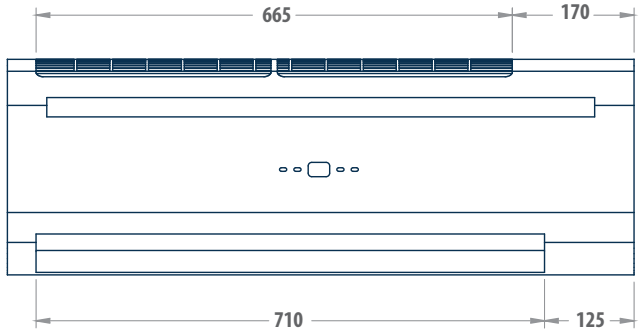

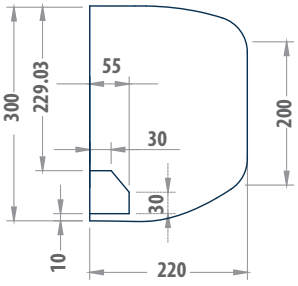

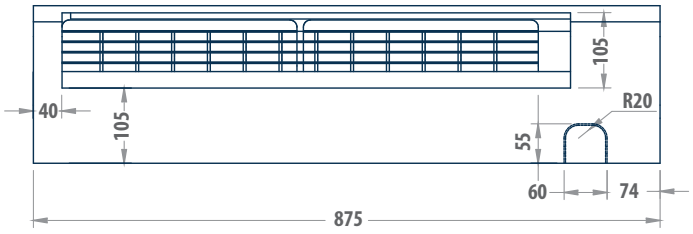

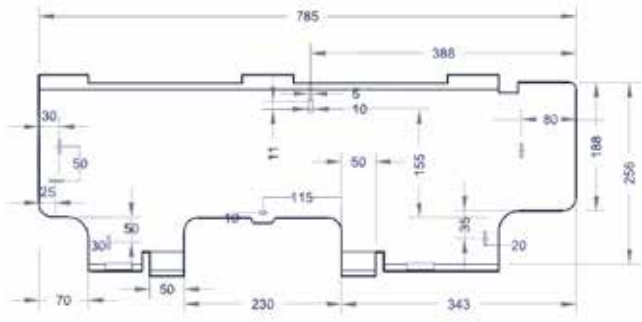

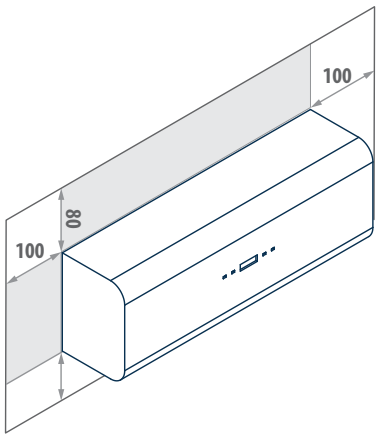

PLUMBING CONNECTIONS

1/2″	Heat exchanger water connections
16 mm	Condensate drainage

Hybrid indoor units for air conditioning system

2x1 1 - 3 kW





ERGO Supervision | 2-pipe system | 4-pipe system | Vertical installation | Centrifugal fan

2x1 by Galletti: evolution in residential air conditioning

Over 50 years of experience in the manufacture of hydronic indoor units for residential and tertiary applications have enabled Galletti to develop an indoor unit of wholly new conception, with the combination of two operating modes in a single unit.
Thanks to an exclusive patented design, 2x1 can function as a heater without the aid of a fan, exploiting instead the principle of natural convection.
In summertime 2x1 offers the advantages of the best fan coil units, cooling, dehumidifying and filtering the air inside the room.
The exclusive patent combines 2 different operating modes in a single unit: 2 different air flow routes inside the unit and 2 distinct heat exchangers make it possible to switch over from natural convection heating to ventilated cooling or heating.
The extra-low speed enables exceptionally quiet operation and high performance.

PLUS

- Possibility of operation in natural convection and forced convection modes
- Cabinet with a refined design
- 5 levels of thermal emission: 4-speed motor and natural convection
- Air outlet flap w/microswitch
- Reversible water connections
- Standard configuration for both 2- and 4-pipe systems



AVAILABLE VERSIONS

4 models with cooling capacities ranging from 1 to 3 kW, available in the versions for operation in 2 and 4-pipe systems.



2-PIPE SYSTEMS

In applications with 2-pipe systems, the configuration requires the 2 exchangers to be connected in series.



4-PIPE SYSTEMS

In 4-pipe systems the exchanger for natural convection is connected to the heating circuit, whilst the exchanger for forced convection is connected to the cooling circuit.



MAIN COMPONENTS

Cabinet with a refined design

RAL9010 colour, front panel made of sheet steel. Side panels and an upper grille with covers on either side manufactured from UV-stabilised ABS to maintain the colour intact over time. The upper grille consists of a flap and adjustable louvers.



Flap

In the wintertime convection heating mode, the flap permits flow through the exchanger by natural convection.



Heat exchangers

2X1 incorporates 2 heat exchangers for 2 distinct operating modes:

- thermo-convector coil made of copper tubing and aluminium fins, where the wide fin spacing optimizes the chimney effect in natural convection.
- fan coil exchanger, made up of copper tubing and high-efficiency aluminium fins submitted to a hydrophilic surface treatment.

Fan assembly

Including centrifugal fans with staggered airfoil-shaped blades, manufactured from anti-static ABS.
Four-speed electrical motor, mounted on vibration damping couplings, directly connected to the fans, with permanently activated capacitor and winding thermal protection.



Air filter

Honey-comb polypropylene washable air filter, mounted on a galvanised sheet frame protected by a net, easily removable for maintenance operations.

OPERATING MODES

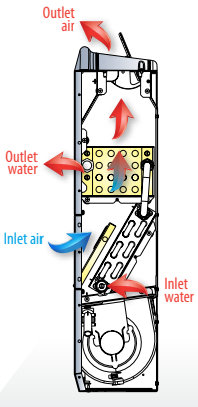

Heating
Static convector mode
Natural convection

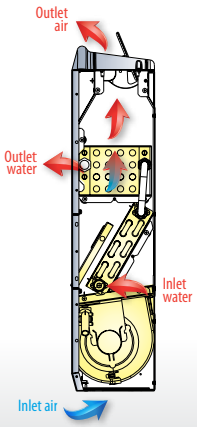

Heating
Static convector mode
Extra low speed

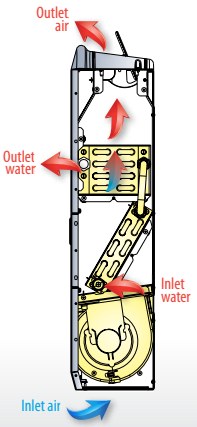

Heating
Fan coil mode
Low, medium and high speed

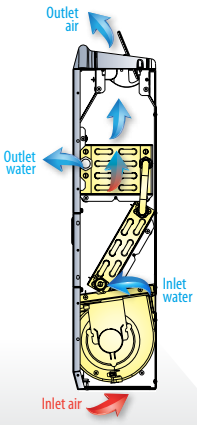

Cooling
Fan coil mode
Extra low, low, medium and high speed

ACCESSORIES

Control panels and thermostats	
CBK	4 speed switch, to be mounted on the unit
MCBE	MYCOMFORT BASE electronic controller with display
MCME	MYCOMFORT MEDIUM electronic controller with display
MCLE	MYCOMFORT LARGE electronic controller with display
KB2X1E	2X1 on-board installation kit
DIST	Mycomfort controller spacer for wall mounting
MCSWE	Water sensor
MCSUE	Remote humidity sensor
EVODISP	EVO CLOCK Remote display
EVOBOARD	EVO 230V circuit board

Valves	
KVK	2 or 3-way valve with ON/OFF or modulating electrothermal motor and hydraulic kit for standard heat exchanger
VKDF	2 or 3-way valve with ON/OFF or modulating electrothermal motor and hydraulic kit for DF heat exchanger
Base and enclosure elements	
ZK	Pair of base and enclosure elements
PVK	Painted rear panel
Auxiliary tray	
BVK	Auxiliary water drip tray

Rated technical data

2X1	Mod.	124					224				
Fan speed		max	med	min	supermin	nat convection	max	med	min	supermin	nat convection
Total cooling capacity (1)	kW	1,17	0,90	0,77	0,62	-	1,62	1,13	0,82	0,65	-
Sensible cooling capacity (1)	kW	0,89	0,70	0,60	0,49	-	1,21	0,86	0,62	0,45	-
Water flow (1)	l/h	202	155	133	108	-	277	194	140	112	-
Pressure drop (1)	kPa	5	3	2	2	-	5	3	2	1	-
Heating capacity (2)	kW	2,89	2,24	1,86	1,65	0,93	3,53	2,84	2,30	1,95	1,30
Water flow (2)	l/h	256	198	162	144	80	310	248	202	173	112
Water pressur drop (2)	kPa	6	4	3	2	1	7	5	3	2	1
Air flow	m^3/h	170	135	115	100	-	225	170	135	110	-
Power input	W	23	17	12	11	-	27	20	14	12	-
Sound power level (3)	dB/A	40	34	29	27	-	43	37	33	31	-

2X1	Mod.	324					424				
Fan speed		max	med	min	supermin	nat convection	max	med	min	supermin	nat convection
Total cooling capacity (1)	kW	2,37	1,82	1,48	1,02	-	3,13	2,17	1,82	1,28	-
Sensible cooling capacity (1)	kW	1,77	1,35	1,10	0,79	-	2,31	1,62	1,35	0,98	-
Water flow (1)	l/h	407	313	252	173	-	536	371	313	220	-
Pressure drop (1)	kPa	14	9	6	3	-	20	10	8	4	-
Heating capacity (2)	kW	5,10	4,13	3,37	2,74	1,49	5,89	5,00	4,13	3,34	1,49
Water flow (2)	l/h	450	364	295	241	130	518	439	364	295	130
Water pressur drop (2)	kPa	13	9	6	4	1	17	13	9	6	1
Air flow	m^3/h	340	250	200	160	-	420	310	250	200	-
Power input	W	37	28	23	22	-	42	31	25	22	-
Sound power level (3)	dB/A	46	39	34	32	-	47	40	34	33	-

(1) Water temperature 7-12°C, air temperature D.B. 27°C, W.B. 19°C (47% relative humidity)
(2) Water temperature 75 / 65°C, air temperature 20°C
(3) Sound power measured according to standards ISO 3741 and ISO 3742



Dimensional drawings

2X1

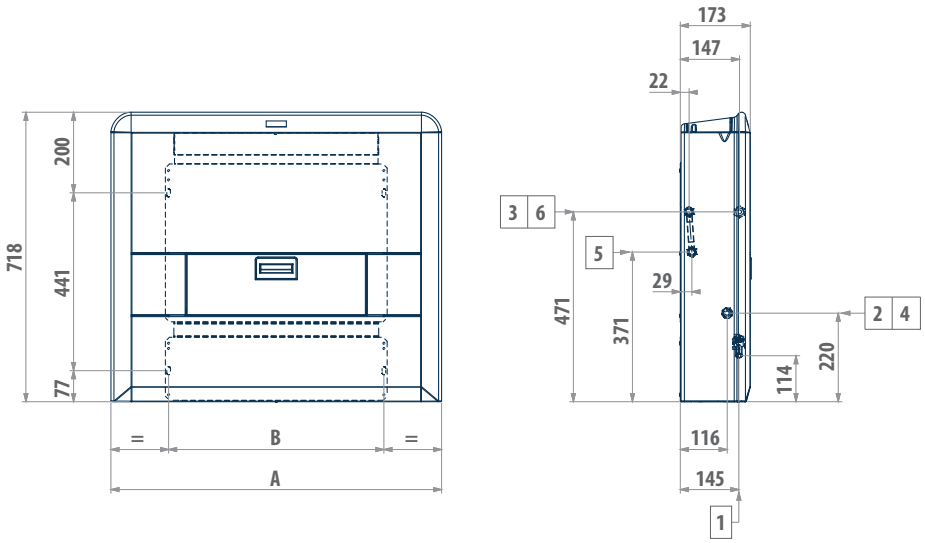

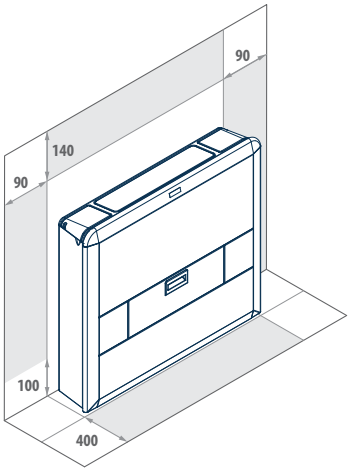

2X1	A	B
124	820	534
224	990	704
324	1160	874
424	1160	874

LEGEND	
1	Water drip system, Ø 17 mm
2	Water inlet, 2-pipe systems, Ø ½" female gas
3	Water outlet, 2-pipe systems, Ø ½" female gas
4	Cooling circuit water inlet, 4-pipe systems, Ø ½" female gas
5	Cooling circuit water outlet, 4-pipe systems, Ø ½" female gas
6	Heating circuit water connections, Ø ½" female gas

Hydronic indoor unit operating with natural convection

KAIMAN 1 - 2 kW





2-pipe system



Vertical installation

Innovative indoor unit that revives the tradition of convective heating

Thanks to over 50 years of experience and new technologies in the production of heat exchangers, it has been possible to design a product in line with the new types of systems, which exploits the principle of the natural convection of air and makes it possible to heat a room faster than with traditional radiators.
The correct temperature of the water in the system is also reached extremely quickly thanks to the low quantity of water in the heat exchanger.
The heat exchanger has also been designed to work at low water temperatures, typically produced by condensation boilers or heat pumps.
Therefore, the surface temperature of KAIMAN will never exceed 40°C, eliminating the risk of burns.
The temperature of the air output by KAIMAN is such as to minimize blackening of the walls above the unit, a phenomenon typical of high temperature indoor units such as radiators.
With KAIMAN the room temperature can be regulated by means of the air outlet flap which, when set in the closed position, stops the heat exchange, interrupting the effect of natural convection.
If required KAIMAN can be fitted with a thermostatic valve that regulates the room temperature.
It is also possible to guarantee a high standard of air quality using an air sanitisation and ionisation system.

PLUS

- ✔ Steel/ABS cabinet
- ✔ Reversible water connections
- ✔ Heating with low water temperatures
- ✔ Incorporable ioniser
- ✔ Incorporable thermostatic valve



ACCESSORIES

- Thermostatic valve
- Feet so as to hide the tubes if they lead out from the floor.
- Air ionisation system



MAIN COMPONENTS

Cabinet

RAL9010 colour, front panel made of sheet steel. Side panels and an upper grille with covers on either side manufactured from UV-stabilised ABS to maintain the colour intact over time. The upper grille consists of a flap and adjustable louvers.



Indoor unit

Made of galvanized sheet steel and particularly shaped so as to increase natural air convection (chimney effect).
High efficiency heat exchanger with copper piping and aluminium fins blocked to pipings by mechanical expansion.



Rated technical data

KAIMAN		K 14	K 16	K 24	K 26	K 34	K 36
Heating output (1)	kW	1,08	1,22	1,40	1,60	1,73	1,99
Water flow (1)	l/h	92	105	120	138	149	171
Water pressure drop (1)	kPa	0,2	0,2	0,3	0,3	0,5	0,4
Heat exchanger number fo rows		4	6	4	6	4	6

(1) Air temperature 20°C, inlet water temperature 75° C, outlet water temperature 65°C

Dimensional drawings

KAIMAN

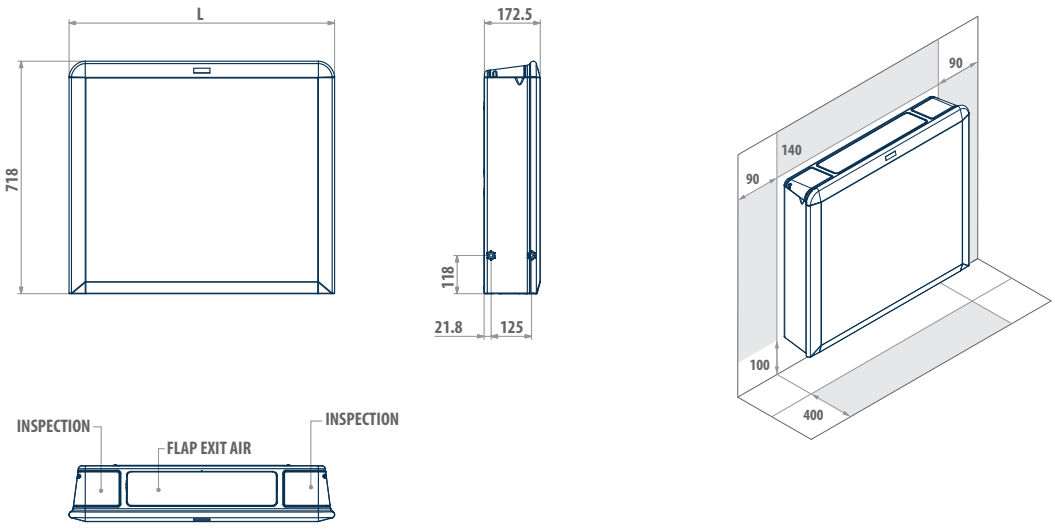

KAIMAN	L	WATER CONNECTIONS
K14 - K16	820	1/2"
K24 - K26	990	1/2"
K34 - K36	1160	1/2"

Cassette fan coils

IWC 3 - 10 kW





Centrifugal fan | ERGO Supervision | 2-pipe system | 4-pipe system | False ceiling mounting

The IWC range combines solidity and efficiency in a single product

IWC by Galletti stands out for the quality of the components and the care taken in assembly and in the details.
The fluid-dynamic optimization at the design stage can be seen in the centrifugal fan with backward-curving blades, statically and dynamically balanced for a correct air flow.
The cassette allows the fan speed to be varied among 4 different steps, thus ensuring excellent modulation in the delivery of power and incredibly low noise levels at the operating speeds. It is moreover equipped with a level sensor and condensate drainage pump already integrated in the unit.
These features make IWC a perfect indoor unit in terms of comfort, reliability and durability like only a product made in Italy can be.
The range is completed by a model with an integrated air sanitisation and ionisation system which is capable of assuring the cleanliness and hygiene of both the unit and the air inside the room. Its aesthetic and constructive features make IWC perfect for installation in any interior with a standard modular false ceiling.

PLUS

- 4-speed fan drive assembly
- Robust structure and attractive design
- Possibility of using a sanitisation system
- Fresh air drawn directly into the intake compartment
- Possibility of connecting 4-pipe systems in the absence of glycol to a single-heat exchanger unit by means of a 4 x 2 valves kits



AVAILABLE VERSIONS

IWC T Unit with one heat exchanger and IR remote control
IWC F Unit with one heat exchanger and wired controller
IWC F BIO Sanitised unit with one heat exchanger and wired controller
IWC DF Unit with two heat exchangers and wired controller



MAIN COMPONENTS

Structure

Made from galvanised steel sheet, externally and internally insulated with heat and soundproofing material. The structure houses the main components and is configured for the introduction of air from an external source.

Heat exchanger

High efficiency heat exchanger made with copper piping and aluminium fins blocked to pipings by mechanical expansion, provided with air vent valves.

Front grille

Complete with filter and adjustable air outlet louvers. Different models of panel based on the type of adjustment selected. Possibility of moving the motorized flap with IR remote control. LED indications of operating status and errors.



Air intake and outlet panel

Colour Ral 9001, with preformed air passages made of high density expanded polystyrene and plastic intake port ensuring effective resistance to mechanical wear.



Fan

Centrifugal fan with backward-curving blades with blade profile designed so as to obtain a stable air flow and extremely quiet, efficient operation even at slow fan speeds.

Electric motor

Asynchronous, mounted on 3 vibration-damping supports and directly coupled to the fan. The motor enables operation at 4 different speeds in order to ensure a more precise adjustment.

CONTROL MODE



IR remote control

The IR control offers the possibility of managing the operation of the indoor unit remotely with utmost convenience



Standard wired controller

The cassette is configured to be connected to the wall-mounted controllers included in the Galletti range



Control with wired controller and sanitisation system

Thermostat control and air sanitisation in a single product

ACCESSORIES

Control panels	
TD4T	Wall-mounted speed selector, thermostat and summer/ winter selecting switch for 2 or 4-pipe systems with valves
KP	Power interface for connecting in parallel up to 4 fan coils to one controller
MCBE	MYCOMFORT BASE electronic controller with display
MCME	MYCOMFORT MEDIUM electronic controller with display
MCLE	MYCOMFORT LARGE electronic controller with display
DIST	MYCOMFORT controller spacer for wall mounting
EVODISP	EVO CLOCK Remote display
EVOBOARD	EVO 230V circuit board
LED503	LED503 Recess wall-mounted electronic controller with display
CO (B-G-W)	Plate for LED503, white W (RAL 7031), grey G (RAL 9003), black B (RAL 9005)
MCSWE	Water sensor for EVO, MYCOMFORT BASE, MEDIUM, LARGE, and LED503 microprocessor controllers
MCSUE	Humidity sensor for EVO, MYCOMFORT MEDIUM and LARGE microprocessor controller
Motor driven on/off and modulating valves	
VK	2-/3-way motor driven ON/OFF valve (230V and 24V actuator) complete with plumbing kit for models with 1 and 2 heat exchangers
VKM	2-/3-way motor driven modulating valve (24V actuator) complete with plumbing kit for models with 1 and 2 heat exchangers
4X2	Kit for 4-pipe systems composed of a 4x2 motor driven ON/OFF or modulating valve (230V and 24V actuator) and plumbing kit for models with 1 heat exchanger

Rated technical data, models with 1 heat exchanger

IWC		32				42				52			
Speed		1	2	3	4	1	2	3	4	1	2	3	4
Total cooling capacity (1) (E)	kW	1,24	2,15	2,35	2,60	1,70	3,50	4,00	4,60	2,47	3,80	4,42	5,06
Sensible cooling capacity (1) (E)	kW	0,91	1,78	2,00	2,23	1,16	2,63	3,05	3,56	1,84	2,97	3,51	4,04
Water flow (1)	l/h	212	367	403	446	292	601	688	788	421	652	760	868
Pressure drop (1) (E)	kPa	3	8	9	11	3	11	14	17	7	14	18	23
Heating capacity (2) (E)	kW	1,54	2,83	3,11	3,49	1,87	4,35	4,85	5,70	3,35	5,33	6,14	6,75
Pressure drop (2) (E)	kPa	3	7	8	10	3	10	13	17	6	14	18	23
Heating capacity (3)	kW	2,64	4,87	5,35	6,00	3,14	7,38	8,20	9,65	5,74	9,15	10,5	11,5
Water flow (3)	l/h	230	428	468	526	274	648	720	846	504	803	925	1012
Pressure drop (3)	kPa	3	9	10	12	2	11	13	18	8	19	24	28
Air flow	m^3/h	180	400	460	520	200	530	630	750	370	630	760	880
Power input (E)	W	17	40	50	60	20	60	70	90	26	71	85	98
Sound power level (4) (E)	dB(A)	30	41	44	46	32	48	51	55	41	53	57	61

IWC		62				82				102			
Speed		1	2	3	4	1	2	3	4	1	2	3	4
Total cooling capacity (1) (E)	kW	4,20	5,00	5,42	6,00	5,50	6,50	8,00	9,10	6,24	8,09	8,90	9,92
Sensible cooling capacity (1) (E)	kW	3,14	3,70	3,99	4,40	4,11	5,08	6,10	6,84	4,69	6,17	6,87	7,71
Water flow (1)	l/h	720	857	929	1030	943	1116	1372	1562	1069	1390	1530	1703
Pressure drop (1) (E)	kPa	16	22	25	30	21	28	41	51	27	42	50	60
Heating capacity (2) (E)	kW	5,40	6,40	7,10	7,70	6,28	8,52	9,42	10,2	7,34	9,53	10,6	11,7
Pressure drop (2) (E)	kPa	16	21	25	30	20	27	39	48	26	42	49	60
Heating capacity (3)	kW	9,2	10,9	12,1	13,1	10,5	14,4	15,8	17,0	12,3	16,0	17,8	19,6
Water flow (3)	l/h	806	954	1062	1148	922	1267	1386	1490	1080	1404	1562	1721
Pressure drop (3)	kPa	18	24	29	33	18	31	37	42	25	40	48	57
Air flow	m^3/h	850	1060	1160	1300	830	1090	1270	1400	1200	1700	1980	2300
Power input (E)	W	80	90	100	120	80	100	120	140	110	130	155	180
Sound power level (4) (E)	dB(A)	43	48	49	51	37	46	50	53	43	49	53	57

Rated technical data, models with 2 heat exchangers

IWC		34				44			
Speed		1	2	3	4	1	2	3	4
Total cooling capacity (1) (E)	kW	1,10	1,72	1,88	2,05	1,58	2,88	3,28	3,76
Sensible cooling capacity (1) (E)	kW	0,83	1,51	1,66	1,82	1,10	2,27	2,60	3,00
Water flow (1)	l/h	187	295	324	353	270	493	562	644
Pressure drop (1) (E)	kPa	4	8	9	11	8	11	13	17
Heating capacity (3) (E)	kW	1,1	1,78	1,95	2,2	1,48	2,87	3,14	3,76
Water flow (3)	l/h	97	155	173	194	130	252	277	331
Pressure drop (3) (E)	kPa	11	25	29	36	7	22	26	36
Air flow	m^3/h	180	400	460	520	200	530	630	750
Power input (E)	W	17	40	50	60	20	60	70	90
Sound power level (4) (E)	dB(A)	30	41	44	46	32	48	51	55

(1) Water temperature 7-12°C, air temperature D.B. 27°C, W.B. 19°C (47% relative humidity)
(2) Inlet water temperature 50°C, water flow rate same as in cooling mode, air temperature 20°C
(3) Water temperature 70 / 60°C, air temperature 20°C
(4) Sound power measured according to standards ISO 3741 and ISO 3742
(E) EUROVENT certified data



Dimensional drawings

IWC 032 - 042 - 052 - 034 - 044

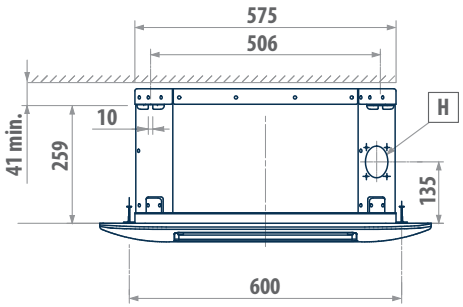

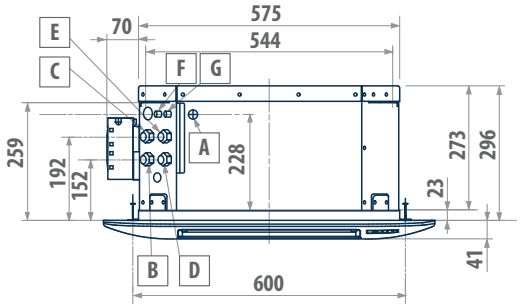

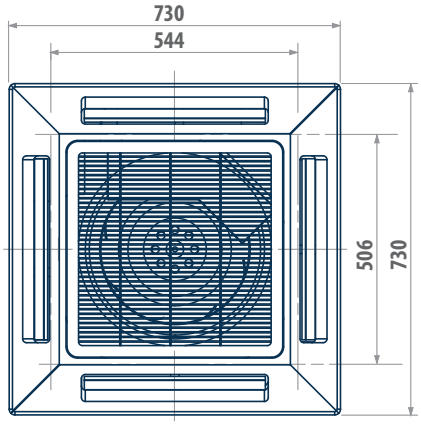

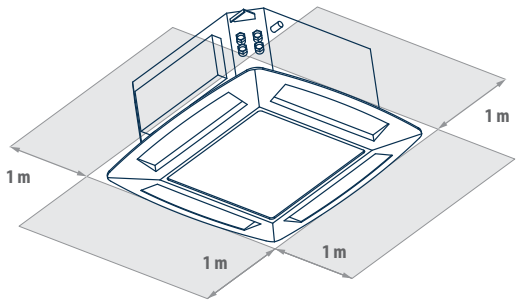

LEGEND

A	Condensate hole: Ø 18 mm
B	Main heat exchanger water inlet: ½" gas female
C	Main heat exchanger water outlet: ½" gas female
D	Additional heat exchanger water inlet: ½" gas female*
E	Additional heat exchanger water outlet: ½" gas female*
F	Main heat exchanger air vent
G	Additional heat exchanger air vent
H	External air intake: Ø 70 mm

* Present in models 34 / 44

Dimensional drawings

IWC 062

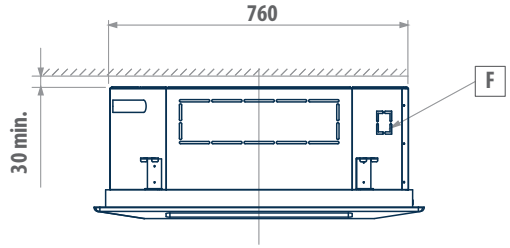

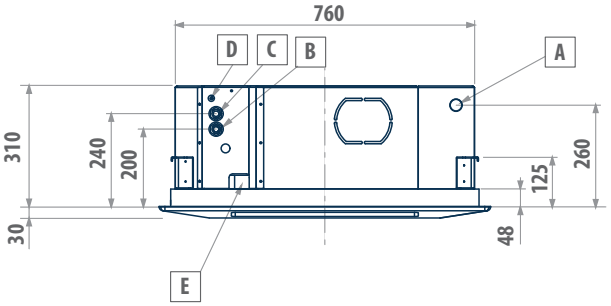

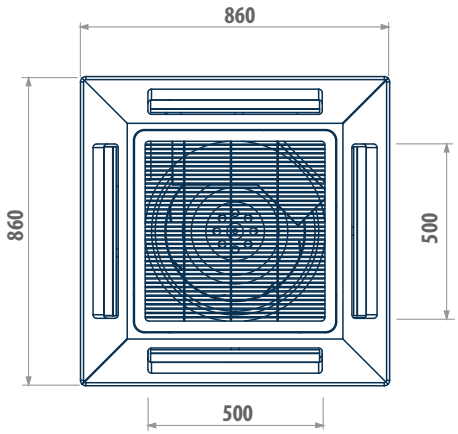

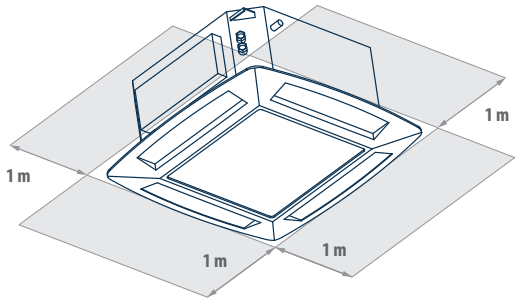

LEGEND

A	Condensate hole: Ø 32 mm
B	Water inlet: 3/4" gas female
C	Water outlet: 3/4" gas female
D	Heat exchanger air vent
E	Electrical cable passage
F	Fresh air intake: 60x55 mm



Dimensional drawings

IWC 082 - 102

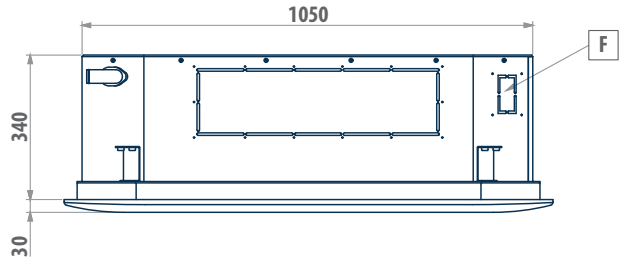

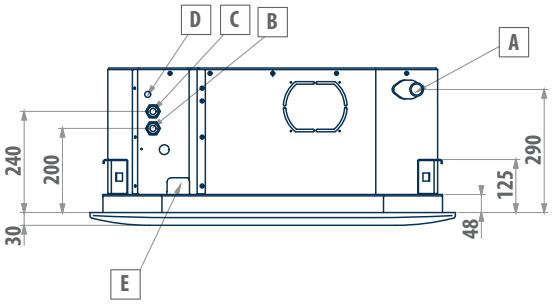

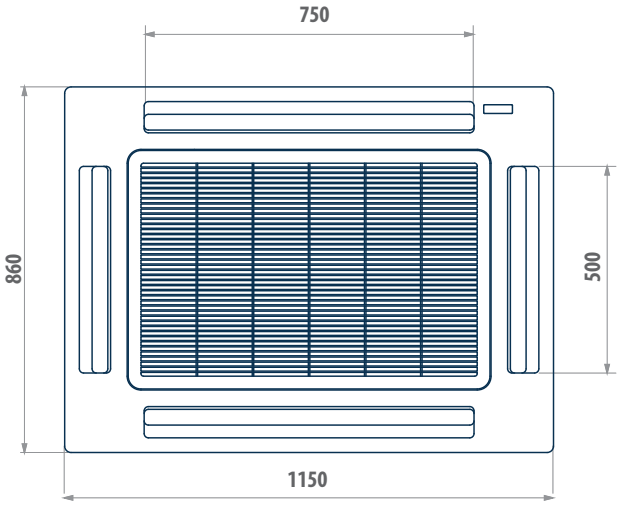

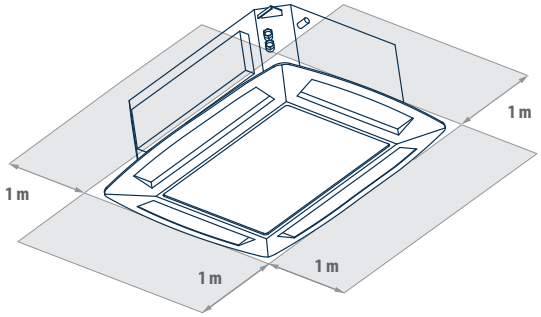

LEGEND

A	Condensate hole: Ø 32 mm
B	Water inlet: 3/4" gas female
C	Water outlet: 3/4" gas female
D	Heat exchanger air vent
E	Electrical cable passage
F	Fresh air intake: 60x55 mm

Cassette fan coils with BLDC motor

IWC i 3 - 5 kW



Inverter Technology



Brushless motor | 2-pipe system | 4-pipe system | False ceiling mounting | Centrifugal fan | ERGO Supervision

The new hydronic cassette unit with modulating fan control for a perfect mix of comfort and precision

In the new water cassette with inverter technology, Galletti combines ten years of know-how in comfort air conditioning with the technology of brushless motors, offering a series of adjustment logics capable of adapting the product to every need.
The modulating control of the fan speed ensures a continuous adaptation of the delivered power to the thermal load without disturbing the user with abrupt changes in the noise emitted.
The extraordinary technology of the permanent magnet BLDC motors offers an additional advantage over the solution with asynchronous motors, reducing electricity consumption by up to 75 %.
The adjustment logic offers the user a control based not only on temperature but also on the humidity present in the room, with an intelligent analysis of the temperature actually perceived by the user.
Galletti responds to growing demands for precision, quiet operation, energy savings and aesthetic value with IWCi, a unit with advanced technological features developed with the traditional care that distinguishes the company's products.
The unit can be controlled by means of the remote control, optionally connected with the kit provided.

PLUS

- Permanent magnet BLDC motor for precise, continuous control
- Electrical input reduced by more than one half compared to the ON/OFF version
- Sturdy structure and pleasing design
- Temperature reading via the remote control
- Control of perceived temperature
- Serial communication networks



AVAILABLE VERSIONS

IWCi Unit with 1 heat exchanger
IWCi DF Unit with 2 heat exchangers



MAIN COMPONENTS

Structure

Made from galvanised steel sheet, externally and internally insulated with heat and soundproofing material. The structure is configured for the intake of air from an external source.

Heat exchanger

High efficiency heat exchanger made with copper piping and aluminium fins blocked to pipings by mechanical expansion, provided with air vent valves.

Front grille

Complete with filter and adjustable air outlet louvers. Possibility of moving the motorized flap with IR remote control. LED indications of operating status and errors.

Fan

Centrifugal fan with backward-curving blades with blade profile designed so as to obtain a stable air flow and extremely quiet, efficient operation even at slow fan speeds.

Air intake and outlet panel

Colour Ral 9001, with preformed air passages made of high density expanded polystyrene and plastic intake port ensuring effective resistance to mechanical wear.



Air filter

Honey-comb polypropylene washable air filter, mounted on a galvanised sheet frame protected by a net, easily removable for maintenance operations.

Electric motor

Permanent magnet controlled by dedicated electronics. This technology guarantees energy savings, compact construction, precision, a reduction in electromagnetic disturbance and a longer working life of the unit.

CONTROL MODE







Remote control

IR remote control with additional probe readings to ensure precise comfort in every part of the room. A special kit enables communication via a wired connection.

Control panel

The hydronic cassettes can moreover be controlled by means of all controllers that have a 0 – 10 V analogue output for controlling the fan speed and a voltage-free contact for setting the operating mode.

ACCESSORIES

CONTROL PANELS	
Remote control	Infrared remote control or wired connection
Wiring kit	Wiring kit for connecting the remote control to the cassette
MCLE	MYCOMFORT LARGE electronic controller with display
DIST	MYCOMFORT controller spacer for wall mounting
EVODISP	EVO CLOCK Remote display
EVOBOARD	EVO 230V circuit board
MCSWE	Water sensor for EVO, MYCOMFORT BASE, MEDIUM, LARGE, and LED503 microprocessor controllers
MCSUE	Humidity sensor for EVO, MYCOMFORT MEDIUM and LARGE microprocessor controller

MOTOR DRIVEN ON/OFF AND MODULATING VALVES	
VK	2-/3-way motor driven ON/OFF valve (230V and 24V actuator) complete with plumbing kit for models with 1 and 2 heat exchangers
VKM	2-/3-way motor driven modulating valve (24V actuator) complete with plumbing kit for models with 1 and 2 heat exchangers
4X2	4x2 motor driven ON/OFF or modulating valve (230V and 24V actuator) complete with plumbing kit for models with 1 heat exchanger

Rated technical data, models with 1 heat exchanger

IWC i		32				42				52			
Speed		1	2	3	4	1	2	3	4	1	2	3	4
Total cooling capacity (1) (E)	kW	1,24	2,15	2,35	2,60	1,70	3,50	4,00	4,60	2,46	3,80	4,42	5,06
Sensible cooling capacity (1) (E)	kW	0,92	1,78	2,00	2,23	1,15	2,63	3,06	3,56	1,82	2,87	3,33	3,80
Water flow (1)	l/h	213	368	404	445	291	600	687	789	422	653	758	869
Pressure drop (1) (E)	kPa	3	8	9	11	3	11	14	17	7	14	18	23
Heating capacity (2) (E)	kW	1,55	2,83	3,11	3,49	1,87	4,35	4,85	5,70	3,35	5,33	6,14	6,75
Pressure drop (2) (E)	kPa	3	7	8	10	3	10	13	17	6	14	18	23
Heating capacity (3)	kW	2,02	3,72	4,09	4,61	2,42	5,7	6,32	7,46	4,46	7,11	8,17	8,91
Water flow (3)	l/h	175	323	355	400	210	495	549	648	387	617	710	774
Pressure drop (3)	kPa	2	6	7	8	2	7	9	12	5	12	16	18
Air flow	m^3/h	180	400	460	520	200	530	630	750	370	630	760	880
Power input (E)	W	4	10	13	15	8	24	28	36	12	34	40	46
Sound power level (4) (E)	dB(A)	30	41	44	46	32	48	51	55	41	53	57	61

Rated technical data, models with 2 heat exchangers

IWC i		34				44			
Speed		1	2	3	4	1	2	3	4
Total cooling capacity (1) (E)	kW	1,03	1,72	1,88	2,05	1,52	2,88	3,28	3,76
Sensible cooling capacity (1) (E)	kW	0,81	1,51	1,66	1,82	1,07	2,27	2,60	3,00
Water flow (1)	l/h	177	295	323	351	295	494	563	645
Pressure drop (1) (E)	kPa	3	8	9	11	8	11	13	17
Heating capacity (3)	kW	1,1	1,78	1,95	2,2	1,48	2,87	3,14	3,76
Water flow (3)	l/h	96	155	169	191	129	249	273	327
Pressure drop (3)	kPa	11	25	29	36	7	22	26	36
Air flow	m^3/h	180	400	460	520	200	530	630	750
Power input (E)	W	5	12	14	17	8	24	28	36
Sound power level (4) (E)	dB(A)	30	41	44	46	32	48	51	55

(1) Water temperature 7-12°C, air temperature D.B. 27°C, W.B. 19°C (47% relative humidity)
(2) Inlet water temperature 50°C, water flow rate same as in cooling mode, air temperature 20°C
(3) Water temperature 70 / 60°C, air temperature 20°C
(4) Sound power measured according to standards ISO 3741 and ISO 3742
(E) EUROVENT certified data



Dimensional drawings

IWC i 032 - 042 - 052 - 034 - 044

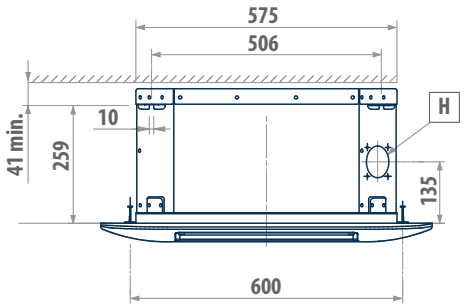

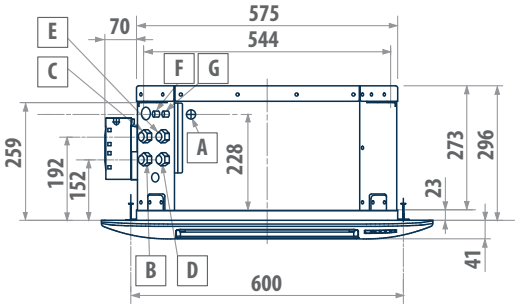

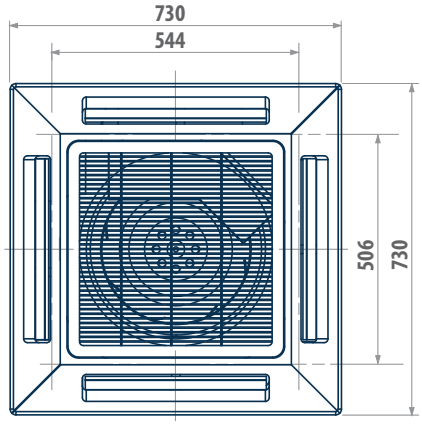

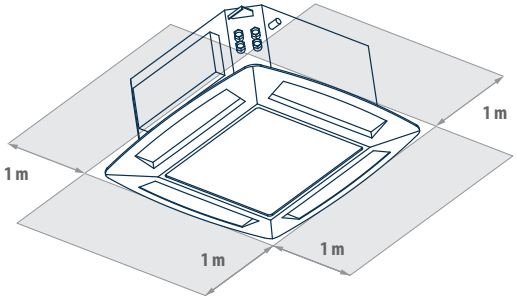

LEGEND

A	Condensate hole: Ø 18 mm
B	Main heat exchanger water inlet: ½" gas female
C	Main heat exchanger water outlet: ½" gas female
D	Additional heat exchanger water inlet: ½" gas female*
E	Additional heat exchanger water outlet: ½" gas female*
F	Main heat exchanger air vent
G	Additional heat exchanger air vent
H	External air intake: Ø 70 mm

* Present in models 34 / 44

Medium available static pressure ducted hydronic units

DUCTIMAX 2 - 8 kW

NEW PRODUCT

JUNE **2015**





ERGO Supervision | 2-pipe system | 4-pipe system | Ducted | Centrifugal fan

Performance and compactness in recessed ceiling installations

The Ductimax ducted unit has been conceived for air conditioning interiors where the installation of high-performance medium-head units with reduced overall dimensions is required. The range features 12 models with air flows of from 300 to 1200 m^3/h. The heat exchanger enables Ductimax to be used under a whole variety of operating conditions. The weight-bearing structure in fact houses a 3- or 4-row exchanger which can be combined with an additional 1- or 2-row exchanger for exceptional performance even with low temperature differentials. The heat exchangers can be optimized for centralized applications such as district cooling. Ductimax is designed for horizontal ceiling installation. The main condensate drip tray is situated inside the structure of the unit and is at a positive pressure relative to the drain outlet to facilitate condensate drainage.
A wide range of wall-mounted controllers is available, including controllers of an electromechanical type and microprocessor controllers with display. The use of MYCOMFORT MEDIUM and LARGE or EVO enables DUCTIMAX to be connected to ERGO.
Heating elements complete with safety devices are available to supplement the hydronic system.
The action of the G3 air filter can be combined with an air ionisation system.

PLUS

- Multi speed motor
- Heat exchanger up to 4 rows
- Reversible water connections
- ABS centrifugal fans
- Can be integrated into the ERGO
- Incorporable ioniser

AVAILABLE VERSIONS

DM xx0 DS Unit for 2-pipe systems

DM xx1 DS Unit for 4-pipe systems equipped with an additional 1-row exchanger for the hot water circuit

DM xx2 DS Unit for 4-pipe systems equipped with an additional 2-row exchanger for the hot water circuit

The structure makes it possible to combine a wide range of accessories on the air intake and outlet sides so as to obtain the optimal configuration of the unit.





MAIN COMPONENTS

Structure

Built from galvanised steel sheet, heat and sound insulated by means of Class 1 self-extinguishing panels. Reduced height to facilitate installation in a horizontal position in a false ceiling. The structure incorporates a drip tray and condensate drain outlet.

Heat exchanger

High efficiency 3 and 4 rows heat exchanger made with copper piping and aluminium fins blocked to pipings by mechanical expansion, provided with brass manifolds and air vent valve. The heat exchanger usually comes with water connections mounted on the left, but it can be turned by 180°. High-efficiency heat exchangers optimized for district cooling applications are available on request.



Electric motor

Single-phase asynchronous multi-speed electric motor with permanently connected capacitor and thermal protector, mounted on vibration-damping supports.

Fans

Double suction centrifugal fans made with ABS or aluminium, with statically and dynamically balanced forward-curving blades, directly coupled to the electric motor.



Air filter

Washable air filter, made of acrylic fibre, filtration class G2 or G3, applied on the air intake; may be pulled out from below.

ACCESSORIES

ELECTROMECHANICAL CONTROL PANELS	
CD	Recess wall-mounted speed selector
CDE	Wall-mounted speed selector
TD	Wall-mounted speed selector, thermostat and summer/winter selecting switch
TDC	Wall-mounted speed selector and thermostat
TD4T	Wall-mounted speed selector, thermostat and summer/winter selecting switch for 2 or 4-pipe systems with valves
TC	Thermostat for minimum water temperature in heating mode, mounted on the heat exchanger
TA	Ambient thermostat
TA2	Ambient thermostat with summer/winter selecting switch
KP	Power interface for connecting in parallel up to 4 fan coils to one controller
MICROPROCESSOR ELECTRONIC CONTROL PANELS	
MCBE	MYCOMFORT BASE electronic controller with display
MCME	MYCOMFORT MEDIUM electronic controller with display
MCLE	MYCOMFORT LARGE electronic controller with display
DIST	MYCOMFORT controller spacer for wall mounting
EVODISP	EVO CLOCK Remote display
EVOVOARD	EVO 230V circuit board
LED503	Recess wall-mounted electronic controller with display
CO (B-G-W)	Plate for LED503, white W (RAL 7031), grey G (RAL 9003), black B (RAL 9005)
MCSWE	Water sensor for EVO, MYCOMFORT BASE, MEDIUM, LARGE, AND LED 503 microprocessor controllers
MCSUE	Humidity sensor for EVO, MYCOMFORT MEDIUM AND LARGE microprocessor controller
PLENUM AND AIR INLET AND OUTLET CONNECTORS	
PMA	Uninsulated air outlet/intake plenum with Ø 200 mm collars
PMAC	Insulated air outlet/intake plenum with Ø 200 mm collars
PAF	Uninsulated front air intake plenum with Ø 200 mm collars
RD	Straight uninsulated air inlet/outlet connector
RDC	Straight insulated air inlet/outlet connector
R90	90° uninsulated air inlet/outlet connector
R90C	90° insulated air inlet/outlet connector
MAFO	Air intake module with G4 undulated filter
CONNECTION HOSES AND PLUGS	
TFA	Uninsulated hose Ø 200 mm
TFM	Insulated hose Ø 200 mm
TP	Plastic plug Ø 200 mm
AIR OUTLET AND INTAKE DUCTS	
CA	Air intake duct with honeycomb grille
CAF	Air intake duct with honeycomb grille and G2 filter
CM	Insulated air outlet duct, with 2-way grille
AIR OUTLET AND INTAKE GRILLES	
GM	Aluminium air outlet grille with 2-row fins, with frame
GA	Aluminium air intake grille, with frame
MOTOR DRIVEN ON/OFF AND MODULATING VALVES	
VK	ON-OFF 3-way motor driven valve (230V and 24V actuator), with hydraulic kit for standard and DF heat exchanger
VK	Modulating 3-way motor driven valve (24V actuator), with hydraulic kit for standard and DF heat exchanger
KV	ON-OFF 2-way motor driven valve (230V and 24V actuator), with hydraulic kit for standard and DF heat exchanger
KVM	Modulating 2-way motor driven valve (24V actuator), with hydraulic kit for standard and DF heat exchanger
ACCESSORIES	
VRC	Auxiliary external drip tray.
RE	Additional heating element for installation on board the unit, complete with safety devices
KSC	Condensate drainage pump

Rated technical data

DM DS		130			140			230			240		
Fan speed		min	med	max	min	med	max	min	med	max	min	med	max
		1	4	6	1	4	6	1	5	7	1	5	7
Air flow E	m^3/h	138	246	276	138	246	276	171	275	341	171	275	341
Available static pressure	Pa	15	50	63	15	50	63	19	50	77	19	50	77
Power supply	V-ph-Hz	230-1-50											
Power input (E)	W	24	57	82	24	57	82	34	45	106	34	45	106
Total cooling capacity (1)	kW	1,12	1,78	1,98	1,18	1,97	2,18	1,30	1,97	2,38	1,39	2,18	2,64
Sensible cooling capacity (1)	kW	0,77	1,28	1,41	0,80	1,36	1,51	0,92	1,41	1,70	0,96	1,51	1,84
Water flow	l/h	191	306	338	202	338	374	223	338	410	238	374	454
Water pressure drop (1)	kPa	2	5	6	3	7	8	3	6	8	4	8	12
Heating capacity (2)	kW	1,32	2,18	2,39	1,37	2,38	2,64	1,60	2,38	2,83	1,69	2,64	3,2
Water flow	l/h	194	324	353	202	349	389	238	353	418	248	389	472
Water pressure drop (2)	kPa	2	4	5	2	6	7	2	5	6	3	7	10
1 row DF heating capacity (3)	kW	1,56	2,24	2,38	1,56	2,24	2,38	1,79	2,39	2,69	1,79	2,39	2,69
1 row DF Water flow	l/h	137	198	209	137	198	209	158	209	238	158	209	238
1 row DF Water pressure drop (3)	kPa	2	3	3	2	3	3	2	3	4	2	3	4
2 row DF heating capacity (3)	kW	2,16	3,50	3,78	2,16	3,50	3,78	2,6	3,8	4,5	2,6	3,8	4,5
2 row DF Water flow	l/h	191	306	331	191	306	331	227	335	392	227	335	392
2 DF row DF Water pressure drop (3)	kPa	3	7	8	3	7	8	4	8	11	4	8	11
Standard coil - number of rows	n°		3			4			3			4	
Total sound power level	dB(A)	26	48	52	26	48	52	36	50	58	36	50	58
Inlet + radiated sound power level	dB(A)	24	46	50	24	46	50	34	48	56	34	48	56
Outlet sound power level	dB(A)	22	45	49	22	45	49	32	47	55	32	47	55

DM DS		330			340			430			440		
Fan speed		min	med	max	min	med	max	min	med	max	min	med	max
		1	6	7	1	6	7	1	4	7	1	4	7
Air flow E	m^3/h	194	360	403	194	360	403	305	532	652	305	532	652
Available static pressure	Pa	14	50	63	14	50	63	17	50	76	17	50	76
Power supply	V-ph-Hz	230-1-50											
Power input (E)	W	34	47	106	34	47	106	76	143	192	76	143	192
Total cooling capacity (1)	kW	1,47	2,36	2,62	1,60	2,77	3,07	2,00	3,31	3,87	2,37	3,92	4,64
Sensible cooling capacity (1)	kW	1,05	1,77	1,97	1,10	1,93	2,14	1,50	2,53	3,00	1,65	2,75	3,27
Water flow	l/h	252	407	450	274	475	526	342	569	662	407	673	796
Water pressure drop (1)	kPa	2	5	5	3	7	9	3	8	11	6	14	18
Heating capacity (2)	kW	1,88	2,59	3,52	1,92	2,69	3,72	2,78	4,40	5,11	2,82	4,47	5,2
Water flow	l/h	281	479	526	281	497	547	342	569	662	407	673	796
Water pressure drop (2)	kPa	2	5	6	2	6	7	3	7	9	4	9	12
1 row DF heating capacity (3)	kW	2,38	3,52	3,75	2,38	3,52	3,75	3,18	4,36	4,82	3,18	4,36	4,82
1 row DF Water flow	l/h	209	310	328	209	310	328	281	382	421	281	382	421
1 row DF Water pressure drop (3)	kPa	2	4	4	2	4	4	3	6	7	3	6	7
2 row DF heating capacity (3)	kW	3,10	5,23	5,70	3,10	5,23	5,70	4,6	7,0	8,0	4,6	7,0	8,0
2 row DF Water flow	l/h	274	457	500	274	457	500	400	616	706	400	616	706
2 DF row DF Water pressure drop (3)	kPa	2	6	7	2	6	7	5	10	12	5	10	12
Standard coil - number of rows	n°		3			4			3			4	
Total sound power level	dB(A)	36	52	58	36	52	58	39	52	60	39	52	60
Inlet + radiated sound power level	dB(A)	34	50	56	34	50	56	37	50	58	37	50	58
Outlet sound power level	dB(A)	32	49	55	32	49	55	35	47	56	35	47	56



Rated technical data

DM DS		530			540			630			640		
Fan speed		min	med	max	min	med	max	min	med	max	min	med	max
		1	6	7	1	6	7	1	2	3	1	2	3
Air flow E	m^3/h	337	687	760	337	687	760	1124	1170	1283	1047	1170	1283
Available static pressure	Pa	12	50	61	12	50	61	40	50	60	40	50	60
Power supply	V-ph-Hz	230-1-50											
Power input (E)	W	76	167	192	76	167	192	235	280	332	235	280	332
Total cooling capacity (1)	kW	2,31	4,39	4,82	2,54	4,95	5,42	6,36	6,97	7,52	7,11	7,80	8,42
Sensible cooling capacity (1)	kW	1,70	3,26	3,58	1,79	3,50	3,83	4,72	5,19	5,61	5,04	5,54	5,99
Water flow	l/h	396	752	828	436	850	929	1091	1197	1291	1221	1340	1445
Water pressure drop (1)	kPa	2	7	8	3	10	12	13	16	18	20	23	26
Heating capacity (2)	kW	3,05	5,66	6,16	3,18	6,04	6,59	7,94	8,65	9,28	8,59	9,40	10,1
Water flow	l/h	396	752	828	436	850	929	1091	1197	1291	1221	1340	1445
Water pressure drop (2)	kPa	2	6	7	3	8	10	11	13	15	16	19	21
1 row DF heating capacity (3)	kW	3,86	5,86	6,18	3,86	5,86	6,18	7,25	7,64	7,96	7,25	7,64	7,96
1 row DF Water flow	l/h	338	515	544	338	515	544	636	670	699	636	670	699
1 row DF Water pressure drop (3)	kPa	8	16	18	8	16	18	23	25	27	23	25	27
2 row DF heating capacity (3)	kW	5,05	8,68	9,25	5,05	8,68	9,25	11,4	12,0	12,5	11,4	12,0	12,5
2 row DF Water flow	l/h	443	760	814	443	760	814	999	1056	1098	999	1056	1098
2 DF row DF Water pressure drop (3)	kPa	6	16	18	6	16	18	26	28	30	26	28	30
Standard coil - number of rows	n°	3			4			3			4		
Total sound power level	dB(A)	39	55	60	39	55	60	59	62	69	59	62	69
Inlet + radiated sound power level	dB(A)	37	53	58	37	53	58	57	60	67	57	60	67
Outlet sound power level	dB(A)	35	51	56	35	51	56	55	58	65	55	58	65

(1) Water temperature 7-12°C, air temperature D.B. 27°C, W.B. 19°C (47% relative humidity)
(2) Inlet water temperature 50°C, water flow rate same as in cooling mode, air temperature 20°C
(3) Water temperature 70 / 60°C, air temperature 20°C
(4) Sound power measured according to standards ISO 3741 and ISO 3742
(E) EUROVENT certified data

Dimensional drawings

DUCTIMAX 1 - 4

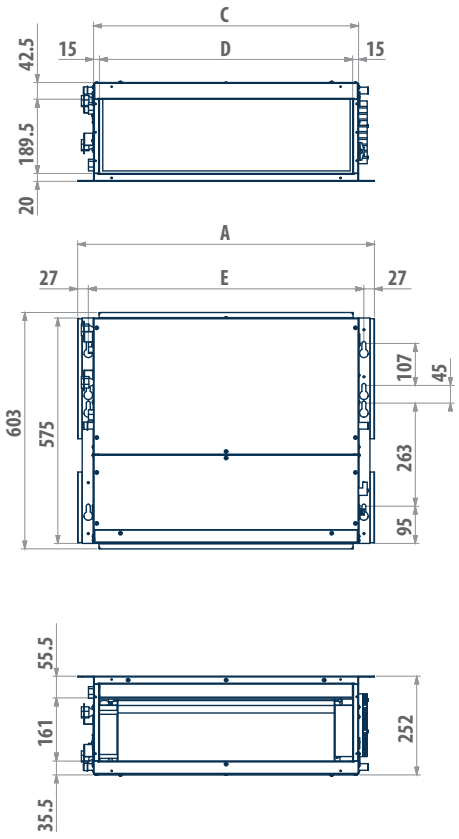

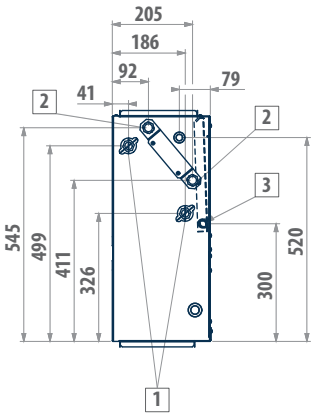

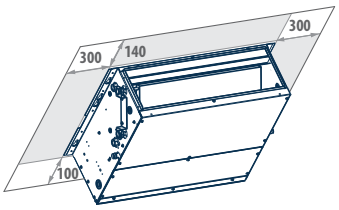

DUCTIMAX	130 - 140	230 - 240	330 - 340	430 - 440
A	757	757	967	967
C	677	677	887	887
D	648	648	858	858
E	703	703	913	913
1	1/2"	1/2"	1/2"	1/2"
2	1/2"	1/2"	1/2"	1/2"
3	Ø 17	Ø 17	Ø 17	Ø 17

LEGEND	
1	Standard heat exchanger water connections
2	Additional heat exchanger water connections
3	Condensate drainage



Dimensional drawings

DUCTIMAX 5 - 6

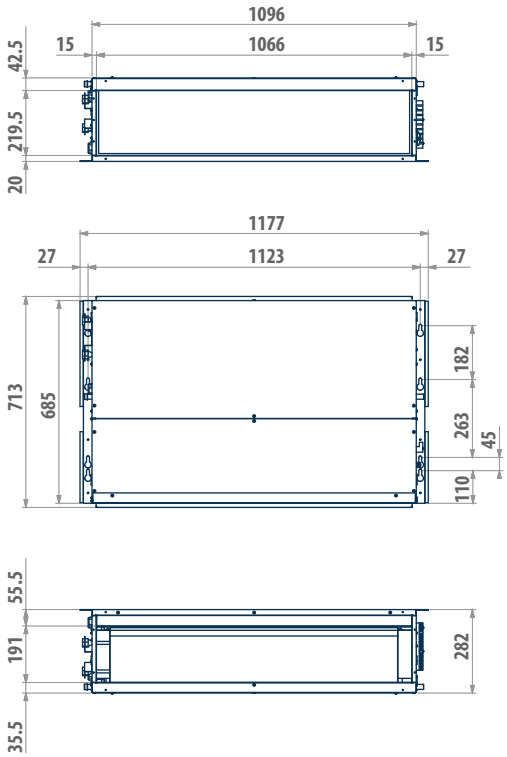

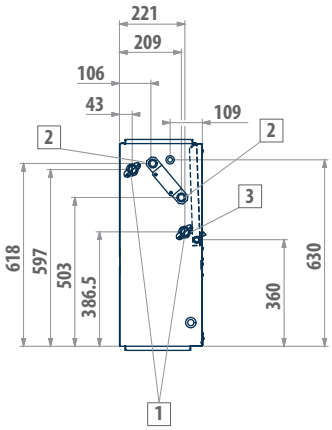

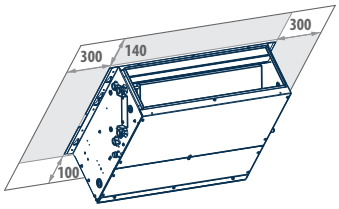

DUCTIMAX	530 - 540	630 - 640
1	3/4"	3/4"
2	3/4"	3/4"
3	Ø 17	Ø 17

LEGEND	
1	Standard heat exchanger water connections
2	Additional heat exchanger water connections
3	Condensate drainage

Medium available static pressure ducted hydronic units with BLDC motor

NEW PRODUCT JUNE **2015**

DUCTIMAX i 2 - 8 kW



Inverter Technology

BLDC Brushless motor | 2 2-pipe system | 4 4-pipe system | Ducted | Centrifugal fan | ERGO Supervision

Modulation and efficiency in a recess ceiling-mounted unit

The range is completed by DUCTIMAXi, which uses inverter BLDC technology in the electric motors. To the features of DUCTIMAX it adds the benefits of brushless technology, including a reduction in electricity consumption and consequent reduction in CO_2 emissions, increase in operating flexibility thanks to the modulation of air flow and increase in the level of comfort in terms of temperature, humidity and noise levels.
The range is made up of 12 models with air flows from 300 to 1200 m^3/h.
Continuous modulation of the air flow and the use of high-efficiency heat exchangers enables operation also with small air – water temperature differences.
The heat exchangers can also be optimized in the circuit for centralized applications such as district cooling.
Operation is controlled from wall-mounted microprocessor control panels with display, such as the MYCOMFORT LARGE and EVO models which also enable DUCTIMAXi to be connected to ERGO.
The action of the G3 air filter can be combined with an air ionisation system, available as an accessory.

PLUS

- Permanent magnet BLDC motor
- Low electricity consumption
- Easy setup of ventilation section
- Heat exchanger up to 4 rows
- Compact dimensions
- Reversible water connections
- Can be integrated into the ERGO
- Incorporable ioniser
- Vast range of available accessories

AVAILABLE VERSIONS

DM xx0 D i Unit for 2-pipe systems
DM xx1 D i Unit for 4-pipe systems equipped with an additional 1-row exchanger for the hot water circuit
DM xx2 D i Unit for 4-pipe systems equipped with an additional 2-row exchanger for the hot water circuit

Besides assuring a big advantage in terms of energy efficiency, the inverter-controlled BLDC motor enables flexibility of installation and reduces the time needed to set up the ventilation section, thanks to the continuous modulation of air flow.

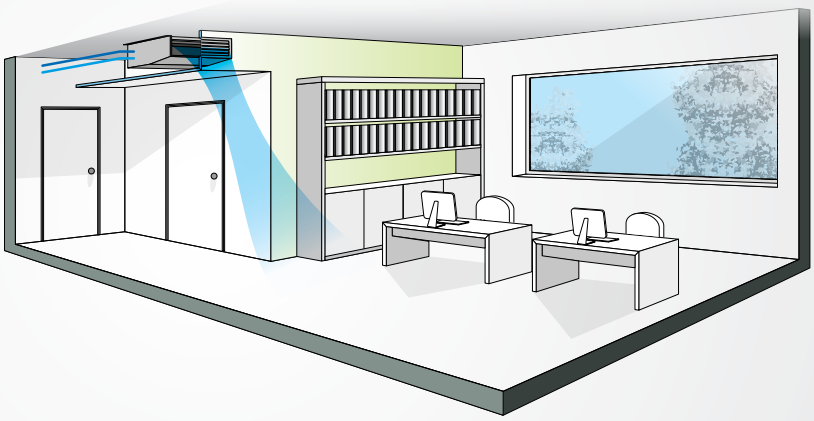



MAIN COMPONENTS

Structure

Built from galvanised steel sheet, heat and sound insulated by means of Class 1 self-extinguishing panels. Reduced height to facilitate installation in a horizontal position in a false ceiling. The structure incorporates a drip tray and condensate drain outlet.
The main condensate drip tray is situated inside the structure of the unit and is at a positive pressure relative to the drain outlet to facilitate condensate drainage.

Fans

Double suction centrifugal fans made with ABS or aluminium, with statically and dynamically balanced forward-curving blades, directly coupled to the electric motor.



BLDC electric motor

Permanent magnet motor The unit is equipped with an inverter board to control the motor, that makes it possible to precisely set the maximum rotation speed (control signal 0-10 V).

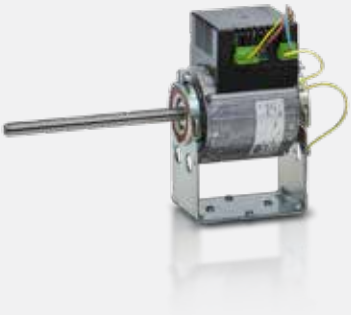

Heat exchanger

High efficiency 3 and 4 rows heat exchanger made with copper piping and aluminium fins blocked to pipings by mechanical expansion, provided with brass manifolds and air vent valve. The heat exchanger usually comes with water connections mounted on the left, but it can be turned by 180°. High-efficiency heat exchangers optimized for district cooling applications are available on request.

Air filter

Washable air filter, made of acrylic fibre, filtration class G2 or G3, applied on the air intake; may be pulled out from below.

ACCESSORIES

MICROPROCESSOR ELECTRONIC CONTROL PANELS	
MCLE	MYCOMFORT large electronic controller with display
DIST	MYCOMFORT controller spacer for wall mounting
EVODISP	EVO CLOCK Remote display
EVOVOARD	EVO 230V circuit board
MCSWE	Water sensor for EVO, MYCOMFORT BASE, MEDIUM, LARGE, and LED 503 microprocessor controllers
MCSUE	Humidity sensor for EVO, MYCOMFORT MEDIUM AND LARGE microprocessor controller
PLENUM AND AIR INLET AND OUTLET CONNECTORS	
PMA	Uninsulated air outlet/intake plenum with Ø 200 mm collars
PMAC	Insulated air outlet/intake plenum with Ø 200 mm collars
PAF	Uninsulated front air intake plenum with Ø 200 mm collars
RD	Straight uninsulated air inlet/outlet connector
RDC	Straight insulated air inlet/outlet connector
R90	90° uninsulated air inlet/outlet connector
R90C	90° insulated air inlet/outlet connector
MAFO	Air intake module with G4 undulated filter
CONNECTION HOSES AND PLUGS	
TFA	Uninsulated hose Ø 200 mm
TFM	Insulated hose Ø 200 mm
TP	Plastic plug Ø 200 mm
AIR OUTLET AND INTAKE DUCTS	
CA	Air intake duct with honeycomb grille
CAF	Air intake duct with honeycomb grille and G2 filter
CM	Insulated air outlet duct, with 2-way grille
AIR OUTLET AND INTAKE GRILLES	
GM	Aluminium air outlet grille with 2-row fins, with frame
GA	Aluminium air intake grille, with frame
MOTOR DRIVEN ON/OFF AND MODULATING VALVES	
VK	ON-OFF 3-way motor driven valve (230V and 24V actuator), with hydraulic kit for standard and DF heat exchanger
VK	Modulating 3-way motor driven valve (24V actuator), with hydraulic kit for standard and DF heat exchanger
KV	ON-OFF 2-way motor driven valve (230V and 24V actuator), with hydraulic kit for standard and DF heat exchanger
KVM	Modulating 2-way motor driven valve (24V actuator), with hydraulic kit for standard and DF heat exchanger
ACCESSORIES	
VRC	Auxiliary external drip tray.
RE	Additional heating element for installation on board the unit, complete with safety devices
KSC	Condensate drainage pump

Rated technical data

DM Di		130			140			230			240		
Fan speed		min	med	max	min	med	max	min	med	max	min	med	max
Voltage		3,2	7,8	8,7	3,2	7,8	8,7	4,1	6,3	8,6	4,1	6,3	8,6
Air flow E	m^3/h	138	246	276	138	246	276	171	275	341	171	275	341
Available static pressure	Pa	15	50	63	15	50	63	19	50	77	19	50	77
Power supply	V-ph-Hz	230-1-50											
Power input (E)	W	5	26	31	5	26	31	12	28	47	12	28	47
Total cooling capacity (1)	kW	1,12	1,78	1,98	1,18	1,97	2,18	1,30	1,97	2,38	1,39	2,18	2,64
Sensible cooling capacity (1)	kW	0,77	1,28	1,41	0,80	1,36	1,51	0,92	1,41	1,70	0,96	1,51	1,84
Water flow	l/h	191	306	338	202	338	374	223	338	410	238	374	454
Water pressure drop (1)	kPa	2	5	6	3	7	8	3	6	8	4	8	12
Heating capacity (2)	kW	1,32	2,18	2,39	1,37	2,38	2,64	1,60	2,38	2,83	1,69	2,64	3,2
Water flow	l/h	194	324	353	202	349	389	238	353	418	248	389	472
Water pressure drop (2)	kPa	2	4	5	2	6	7	2	5	6	3	7	10
1 row DF heating capacity (3)	kW	1,56	2,24	2,38	1,56	2,24	2,38	1,79	2,39	2,69	1,79	2,39	2,69
1 row DF Water flow	l/h	137	198	209	137	198	209	158	209	238	158	209	238
1 row DF Water pressure drop (3)	kPa	2	3	3	2	3	3	2	3	4	2	3	4
2 row DF heating capacity (3)	kW	2,16	3,50	3,78	2,16	3,50	3,78	2,6	3,8	4,5	2,6	3,8	4,5
2 row DF Water flow	l/h	191	306	331	191	306	331	227	335	392	227	335	392
2 DF row DF Water pressure drop (3)	kPa	3	7	8	3	7	8	4	8	11	4	8	11
Standard coil - number of rows	n°		3			4			3			4	
Total soun power level	dB(A)	26	48	52	26	48	52	36	50	58	36	50	58
Inlet + radiated sound power level	dB(A)	24	46	50	24	46	50	34	48	56	34	48	56
Outlet sound power level	dB(A)	22	45	49	22	45	49	32	47	55	32	47	55

DM Di		330			340			430			440		
Fan speed		min	med	max	min	med	max	min	med	max	min	med	max
Voltage		4,4	7,8	8,9	4,4	7,8	8,9	4,2	6,6	8,9	4,2	6,6	8,9
Air flow E	m^3/h	194	360	403	194	360	403	305	532	652	305	532	652
Available static pressure	Pa	14	50	63	14	50	63	17	50	76	17	50	76
Power supply	V-ph-Hz	230-1-50											
Power input (E)	W	14	37	49	5	26	31	19	49	79	19	49	79
Total cooling capacity (1)	kW	1,47	2,36	2,62	1,60	2,77	3,07	2,00	3,31	3,87	2,37	3,92	4,64
Sensible cooling capacity (1)	kW	1,05	1,77	1,97	1,10	1,93	2,14	1,50	2,53	3,00	1,65	2,75	3,27
Water flow	l/h	252	407	450	274	475	526	342	569	662	407	673	796
Water pressure drop (1)	kPa	2	5	5	3	7	9	3	8	11	6	14	18
Heating capacity (2)	kW	1,88	2,59	3,52	1,92	2,69	3,72	2,78	4,40	5,11	2,82	4,47	5,2
Water flow	l/h	281	479	526	281	497	547	342	569	662	407	673	796
Water pressure drop (2)	kPa	2	5	6	2	6	7	3	7	9	4	9	12
1 row DF heating capacity (3)	kW	2,38	3,52	3,75	2,38	3,52	3,75	3,18	4,36	4,82	3,18	4,36	4,82
1 row DF Water flow	l/h	209	310	328	209	310	328	281	382	421	281	382	421
1 row DF Water pressure drop (3)	kPa	2	4	4	2	4	4	3	6	7	3	6	7
2 row DF heating capacity (3)	kW	3,10	5,23	5,70	3,10	5,23	5,70	4,6	7,0	8,0	4,6	7,0	8,0
2 row DF Water flow	l/h	274	457	500	274	457	500	400	616	706	400	616	706
2 DF row DF Water pressure drop (3)	kPa	2	6	7	2	6	7	5	10	12	5	10	12
Standard coil - number of rows	n°		3			4			3			4	
Total soun power level	dB(A)	36	52	58	36	52	58	39	52	60	39	52	60
Inlet + radiated sound power level	dB(A)	34	50	56	34	50	56	37	50	58	37	50	58
Outlet sound power level	dB(A)	32	49	55	32	49	55	35	47	56	35	47	56



Rated technical data

DM Di		530			540			630			640		
Fan speed		min	med	max	min	med	max	min	med	max	min	med	max
Voltage		4,1	7,8	8,6	4,1	7,8	8,6	8,3	8,5	8,6	8,3	8,5	8,6
Air flow E	m^3/h	337	687	760	337	687	760	1124	1170	1283	1047	1170	1283
Available static pressure	Pa	12	50	61	12	50	61	40	50	60	40	50	60
Power supply	V-ph-Hz	230-1-50											
Power input (E)	W	5	26	31	5	26	31	12	28	47	12	28	47
Total cooling capacity (1)	kW	2,31	4,39	4,82	2,54	4,95	5,42	6,36	6,97	7,52	7,11	7,80	8,42
Sensible cooling capacity (1)	kW	1,70	3,26	3,58	1,79	3,50	3,83	4,72	5,19	5,61	5,04	5,54	5,99
Water flow	l/h	396	752	828	436	850	929	1091	1197	1291	1221	1340	1445
Water pressure drop (1)	kPa	2	7	8	3	10	12	13	16	18	20	23	26
Heating capacity (2)	kW	3,05	5,66	6,16	3,18	6,04	6,59	7,94	8,65	9,28	8,59	9,40	10,1
Water flow	l/h	396	752	828	436	850	929	1091	1197	1291	1221	1340	1445
Water pressure drop (2)	kPa	2	6	7	3	8	10	11	13	15	16	19	21
1 row DF heating capacity (3)	kW	3,86	5,86	6,18	3,86	5,86	6,18	7,25	7,64	7,96	7,25	7,64	7,96
1 row DF Water flow	l/h	338	515	544	338	515	544	636	670	699	636	670	699
1 row DF Water pressure drop (3)	kPa	8	16	18	8	16	18	23	25	27	23	25	27
2 row DF heating capacity (3)	kW	5,05	8,68	9,25	5,05	8,68	9,25	11,4	12,0	12,5	11,4	12,0	12,5
2 row DF Water flow	l/h	443	760	814	443	760	814	999	1056	1098	999	1056	1098
2 DF row DF Water pressure drop (3)	kPa	6	16	18	6	16	18	26	28	30	26	28	30
Standard coil - number of rows	n°		3			4			3			4	
Total soun power level	dB(A)	39	55	60	39	55	60	59	62	69	59	62	69
Inlet + radiated sound power level	dB(A)	37	53	58	37	53	58	57	60	67	57	60	67
Outlet sound power level	dB(A)	35	51	56	35	51	56	55	58	65	55	58	65

(1) Water temperature 7-12°C, air temperature D.B. 27°C, W.B. 19°C (47% relative humidity)
(2) Inlet water temperature 50°C, water flow rate same as in cooling mode, air temperature 20°C
(3) Water temperature 70 / 60°C, air temperature 20°C
(4) Sound power measured according to standards ISO 3741 and ISO 3742
(E) EUROVENT certified data

Dimensional drawings

DUCTIMAX i

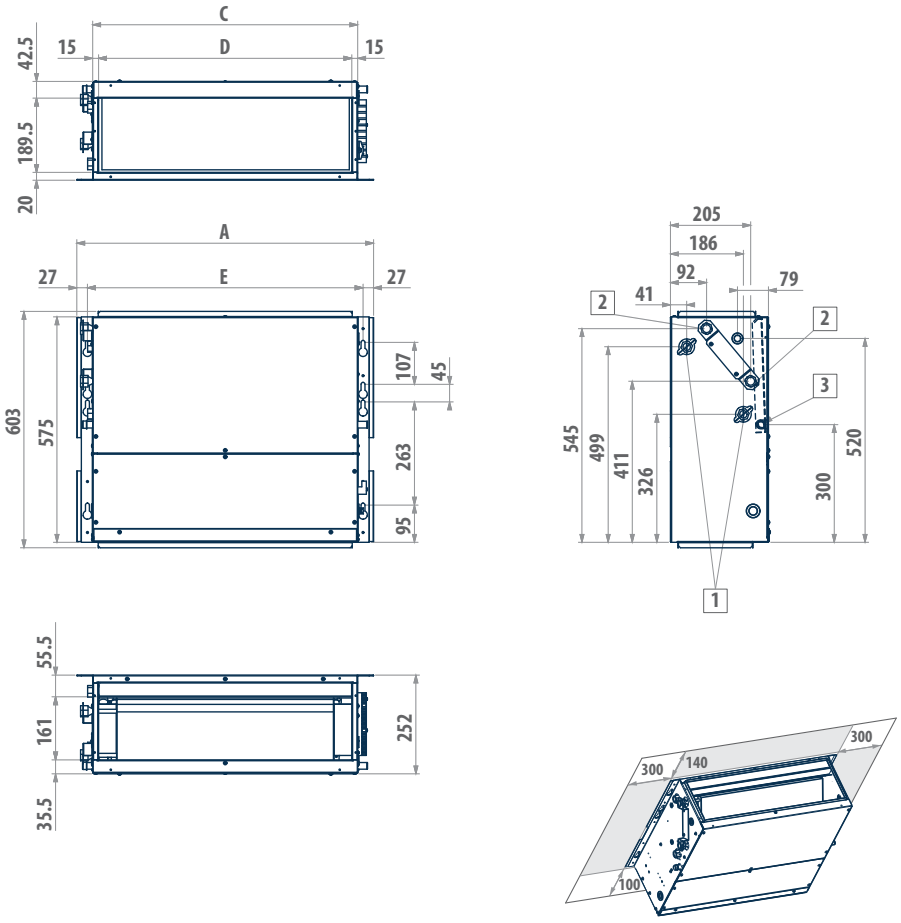

DUCTIMAX i	130 - 140	230 - 240	330 - 340	430 - 440
A	757	757	967	967
C	677	677	887	887
D	648	648	858	858
E	703	703	913	913
1	1/2"	1/2"	1/2"	1/2"
2	1/2"	1/2"	1/2"	1/2"
3	Ø 17	Ø 17	Ø 17	Ø 17

LEGEND	
1	Standard heat exchanger water connections
2	Additional heat exchanger water connections
3	Condensate drainage



Dimensional drawings

DUCTIMAX i

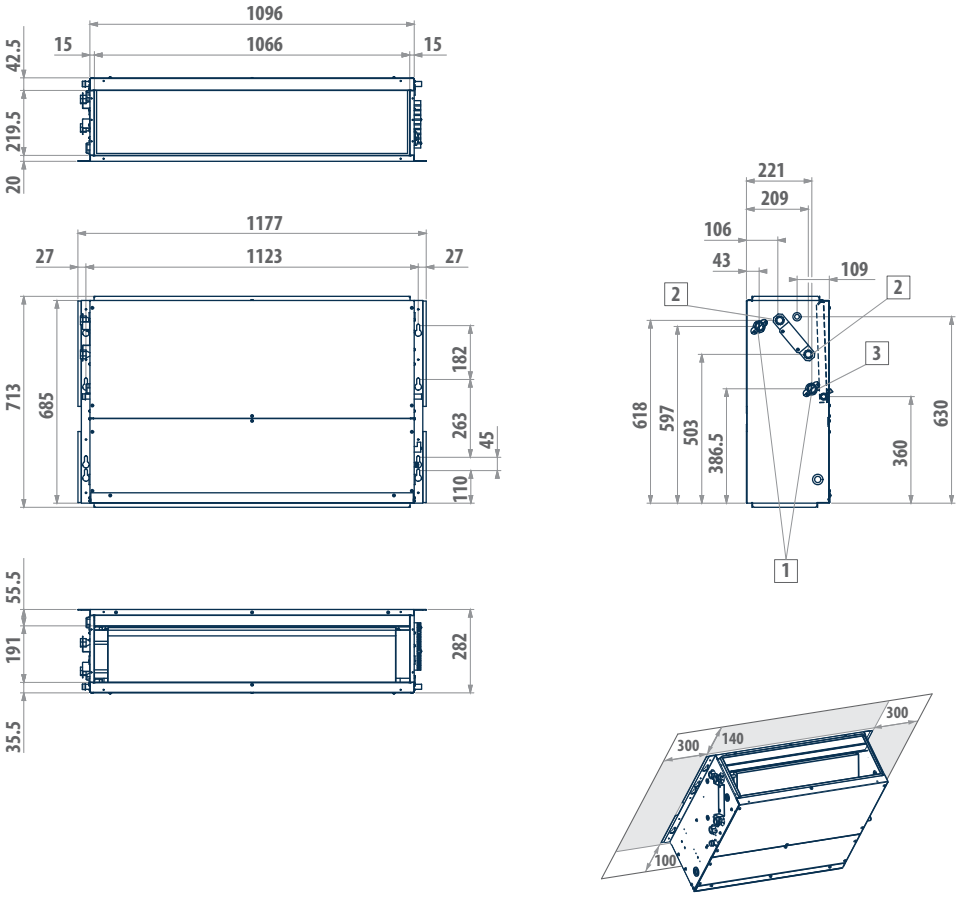

DUCTIMAX i	530 - 540	630 - 640
1	3/4"	3/4"
2	3/4"	3/4"
3	Ø 17	Ø 17

LEGEND	
1	Standard heat exchanger water connections
2	Additional heat exchanger water connections
3	Condensate drainage

Medium available static pressure ducted hydronic units

PWN 3 - 10 kW





ERGO Supervision | Ducted | 2-pipe system | 4-pipe system | Centrifugal fan

PLUS

- Standard 7 speed motors
- Heat exchanger up to 6 rows
- Available head up to 80 Pa
- Reduced height across the entire range (240 mm)
- Amply sized condensate drip tray
- Wide range of available accessories
- Can be integrated into the ERGO

Versatile and quiet, designed for recess ceiling mounting

The range of PWN duct units is designed for air conditioning systems in interiors requiring the installation of particularly versatile, low-noise, medium-head (up to 80Pa) units.
PWN ducted units are available in 9 different models with flow rates ranging from 400 to 1200 m^3/h and cooling capacities from 2.6 to 10.3 kW.
The PWN units are built with a galvanized sheet steel weight-bearing structure, duly insulated, and all models are equipped with a 7-speed electric motor which ensures great flexibility during installation. The heat exchanger is available in 3-, 4- or 6-row versions. The latter is particularly recommended for heat pump systems, in which the outlet water temperature is lower. The exchanger is normally mounted with connections on the left side (the wiring box is present on the same side), but it can be rotated by 180° on the installation site. By installing the accessory external module (additional MDF exchanger) it is possible to connect PWN in 4-pipe systems.
PWN units can find a place in commercial buildings, hotel rooms and meeting rooms. They have been conceived with a particular construction enabling the basic model to be expanded by installing a series of accessories so as to adapt PWN to the needs of any horizontal recess ceiling-mount application.

Thanks to the flexibility assured by the 7-speed motor, PWN can be used in numerous applications requiring a precise distribution of air by means of ducts.

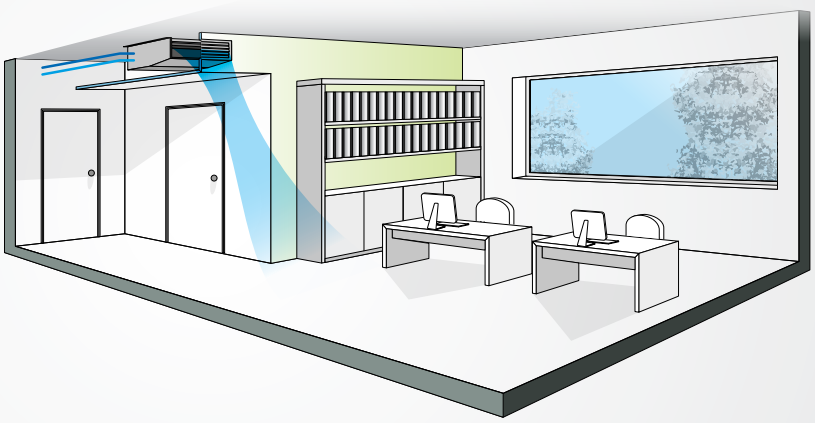



MAIN COMPONENTS

Structure

Built from galvanized sheet steel, designed for horizontal installation, insulated with class 1 self-extinguishing panels, complete with slots for rapid fixing.

Heat exchanger

High efficiency 3, 4 and 6 rows heat exchanger made with copper piping and aluminium fins blocked to pipings by mechanical expansion, provided with brass manifolds and air vent valve. The water connections are reversible.

Fans

Double suction centrifugal fans made with ABS or aluminium, with statically and dynamically balanced forward-curving blades, directly coupled to the electric motor.



Electric motor

Seven-speed electrical motor, mounted on vibration damping couplings, directly connected to the fans, with permanently activated capacitor and winding thermal protection.

Water drip tray

Extended beyond the dimensions of the unit, it can collect condensate both from the heat exchanger and any regulating valves.



Air filter

Washable air filter, made of acrylic fibre, mounted on a galvanised sheet frame protected by a net, easily removable for maintenance operations. Class G3 air filter available as an optional accessory.

ACCESSORIES

ELECTROMECHANICAL CONTROL PANELS	
CD	Recess wall-mounted speed selector
CDE	Wall-mounted speed selector
TD	Wall-mounted speed selector, thermostat and summer/winter selecting switch
TDC	Wall-mounted speed selector and thermostat
TD4T	Wall-mounted speed selector, thermostat and summer/winter selecting switch for 2 or 4-pipe systems with valves
TC	Thermostat for minimum water temperature in heating mode, mounted on the heat exchanger
TA	Ambient thermostat
TA2	Ambient thermostat with summer/winter selecting switch
CSD	Recess mounted controller for opening and closing the SM motor-driven regulating louver
KP	Power interface for connecting in parallel up to 4 fan coils to one controller
MICROPROCESSOR ELECTRONIC CONTROL PANELS	
MCBE	MYCOMFORT BASE electronic controller with display
MCME	MYCOMFORT MEDIUM electronic controller with display
MCLE	MYCOMFORT LARGE electronic controller with display
DIST	MYCOMFORT controller spacer for wall mounting
EVODISP	EVO CLOCK Remote display
EVOBOARD	EVO 230V circuit board
CO (B-G-W)	Plate for LED503, white W (RAL 7031), grey G (RAL 9003), black B (RAL 9005)
LED503	Recess wall-mounted electronic controller with display
MCSWE	Water sensor for EVO, MYCOMFORT BASE, MEDIUM, LARGE, and LED503 microprocessor controllers
MCSUE	Humidity sensor for EVO, MYCOMFORT MEDIUM and LARGE microprocessor controller
PLENUM AND AIR INLET AND OUTLET CONNECTORS	
PMA	Uninsulated air outlet/intake plenum with Ø 200 mm collars
PMAC	Insulated air outlet/intake plenum with Ø 200 mm collars
PAF	Uninsulated front air intake plenum with Ø 200 mm collars
RD	Straight uninsulated air inlet/outlet connector
RDC	Straight insulated air inlet/outlet connector
R90	90° uninsulated air inlet/outlet connector
R90C	90° insulated air inlet/outlet connector
CONNECTION HOSES AND PLUGS	
TFA	Uninsulated hose Ø 200 mm
TFM	Insulated hose Ø 200 mm
TP	Plastic plug Ø 200 mm
AIR OUTLET AND INTAKE DUCTS	
CA	Air intake duct with honeycomb grille
CAF	Air intake duct with honeycomb grille and G2 filter
CM	Insulated air outlet duct, with 2-way grille
AIR INTAKE AND OUTLET SILENCERS	
SIL	Plenum silencer for air intake/outlet
AIR OUTLET AND INTAKE GRILLES	
GM	Aluminium air outlet grille with 2-row fins, with frame
GA	Aluminium air intake grille, with frame
MOTOR DRIVEN ON/OFF AND MODULATING VALVES	
VK	ON-OFF 3-way motor driven valve (230V and 24V actuator), with hydraulic kit for standard and DF heat exchanger
VKM	Modulating 3-way motor driven valve (24V actuator), with hydraulic kit for standard and DF heat exchanger
KV	ON-OFF 2-way motor driven valve (230V and 24V actuator), with hydraulic kit for standard and DF heat exchanger
KVM	Modulating 2-way motor driven valve (24V actuator), with hydraulic kit for standard and DF heat exchanger
ACCESSORIES	
MDF	Additional heat exchanger module for hot water operation.
RE	Additional heating element for installation on board the unit, complete with safety devices
SM	Motor-driven external air intake louver
KSC	Condensate drainage pump
FG3	Air filter - class G3

Rated technical data

PWN		13			14			16		
Fan speed		min	med	max	min	med	max	min	med	max
		1 / 7	5 / 7	7 / 7	1 / 7	5 / 7	7 / 7	1 / 7	5 / 7	7 / 7
Air flow (E)	m^3/h	184	297	371	184	297	371	184	297	371
Available static pressure (E)	Pa	19	50	78	19	50	70	19	50	70
Power supply	V-ph-Hz	230 - 1 - 50			230 - 1 - 50			230 - 1 - 50		
Power input (E)	W	34	69	106	34	69	106	34	69	106
Total cooling capacity (1) (E)	kW	1,28	1,98	2,43	1,52	2,38	2,93	1,70	2,60	3,24
Sensible cooling capacity (1) (E)	kW	0.93	1,44	1,76	1,04	1,64	2,01	1,12	1,75	2,18
Water flow	l/h	219	340	417	179	409	540	388	659	844
Water pressure drop (1) (E)	kPa	2	5	7	4	8	12	3	7	10
Heating capacity (2) (E)	kW	1,67	2,52	3,04	1,77	2,76	3,37	1,84	2,92	3,61
Water flow	l/h	219	340	417	179	409	540	193	447	600
Water pressure drop (2) (E)	kPa	2	4	7	3	7	10	9	5	8
MDF heating capacity (3) (E)	kW	1,97	2,64	2,98	1,95	2,64	2,98	1,95	2,64	2,98
Water flow	l/h	173	231	261	173	231	272	173	231	272
Water pressure drop (3) (E)	kPa	1	3	3	1	3	3	1	3	3
Standard coil - number of rows	n°		3			4			6	
MDF coil . Numer of rows	n°		1			1			1	
Total sound power level (4)	dB(A)	36	50	58	36	50	58	36	50	58
Inlet + radiated sound power level (4) (E)	dB(A)	36	49	55	37	49	55	33	46	55
Outlet sound power level (4) (E)	dB(A)	33	47	55	33	47	55	33	47	55

PWN		23			24			26		
Fan speed		min	med	max	min	med	max	min	med	max
		1 / 7	4 / 7	7 / 7	1 / 7	4 / 7	7 / 7	1 / 7	4 / 7	7 / 7
Air flow (E)	m^3/h	283	576	722	331	576	722	331	576	722
Available static pressure (E)	Pa	16	50	70	16	50	79	16	50	79
Power supply	V-ph-Hz	230 - 1 - 50			230 - 1 - 50			230 - 1 - 50		
Power input (E)	W	76	143	192	76	143	192	76	143	192
Total cooling capacity (1) (E)	kW	1,86	3,84	4,66	2,35	3,92	4,93	2,72	4,76	5,88
Sensible cooling capacity (1) (E)	kW	1,38	2,74	3,31	1,70	2,84	3,52	1,87	3,24	4,01
Water flow	l/h	388	659	844	401	673	844	468	817	1007
Water pressure drop (1) (E)	kPa	3	9	13	2	4	8	3	8	12
Heating capacity (2) (E)	kW	2,54	4,71	5,65	3,10	5,07	6,18	3,25	5,46	6,71
Water flow	l/h	388	659	844	401	673	844	468	817	1007
Water pressure drop (2) (E)	kPa	2	8	11	2	5	8	3	7	10
MDF heating capacity (3) (E)	kW	3,57	4,97	5,61	3,57	4,97	5,61	3,57	4,97	5,61
Water flow	l/h	315	437	507	315	437	490	315	437	490
Water pressure drop (3) (E)	kPa	6	11	14	5	11	14	6	12	15
Standard coil - number of rows	n°		3			4			6	
MDF coil . Numer of rows	n°		1			1			1	
Total sound power level (4)	dB(A)	36	52	60	37	52	60	37	52	60
Inlet + radiated sound power level (4) (E)	dB(A)	38	53	57	34	51	57	34	51	57
Outlet sound power level (4) (E)	dB(A)	39	49	57	34	49	57	34	49	57

(1) Water temperature 7-12°C, air temperature D.B. 27°C, W.B. 19°C (47% relative humidity)
(2) Inlet water temperature 50°C, water flow rate same as in cooling mode, air temperature 20°C
(3) Water temperature 70 / 60°C, air temperature 20°C
(4) Sound power measured according to standards ISO 3741 and ISO 3742
(E) EUROVENT certified data



Rated technical data

PWN		33			34			36		
Fan speed		min	med	max	min	med	max	min	med	max
		1 / 7	4 / 7	7 / 7	1 / 7	4 / 7	7 / 7	1 / 7	4 / 7	7 / 7
Air flow (E)	m³/h	572	715	905	572	715	905	572	715	905
Available static pressure (E)	Pa	32	50	80	32	50	80	32	50	80
Power supply	V-ph-Hz	230 - 1 - 50			230 - 1 - 50			230 - 1 - 50		
Power input (E)	W	155	193	294	155	193	294	155	193	294
Total cooling capacity (1) (E)	kW	3,98	4,88	6,00	4,41	5,47	6,77	5,09	6,34	7,94
Sensible cooling capacity (1) (E)	kW	2,82	3,44	4,19	3,07	3,79	4,68	3,40	4,24	5,31
Water flow	l/h	684	838	1022	758	938	1155	874	1088	1355
Water pressure drop (1) (E)	kPa	7	10	14	6	9	13	8	11	17
Heating capacity (2) (E)	kW	4,92	5,93	7,18	5,30	6,48	7,95	5,64	6,98	8,71
Water flow	l/h	684	838	1022	758	938	1155	874	1088	1355
Water pressure drop (2) (E)	kPa	5	8	11	5	7	11	6	9	14
MDF heating capacity (3) (E)	kW	7,22	8,55	10,1	7,22	8,55	10,1	6,48	7,67	9,10
Water flow	l/h	637	749	876	637	749	876	637	749	876
Water pressure drop (3) (E)	kPa	3	4	5	3	4	5	3	4	5
Standard coil - number of rows	n°	3			4			6		
MDF coil . Numer of rows	n°	2			2			2		
Total sound power level (4)	dB(A)	53	58	69	53	58	69	53	58	69
Inlet + radiated sound power level (4) (E)	dB(A)	50	62	65	50	55	65	50	58	65
Outlet sound power level (4) (E)	dB(A)	50	56	66	50	56	66	50	56	66

Dimensional drawings

PWN

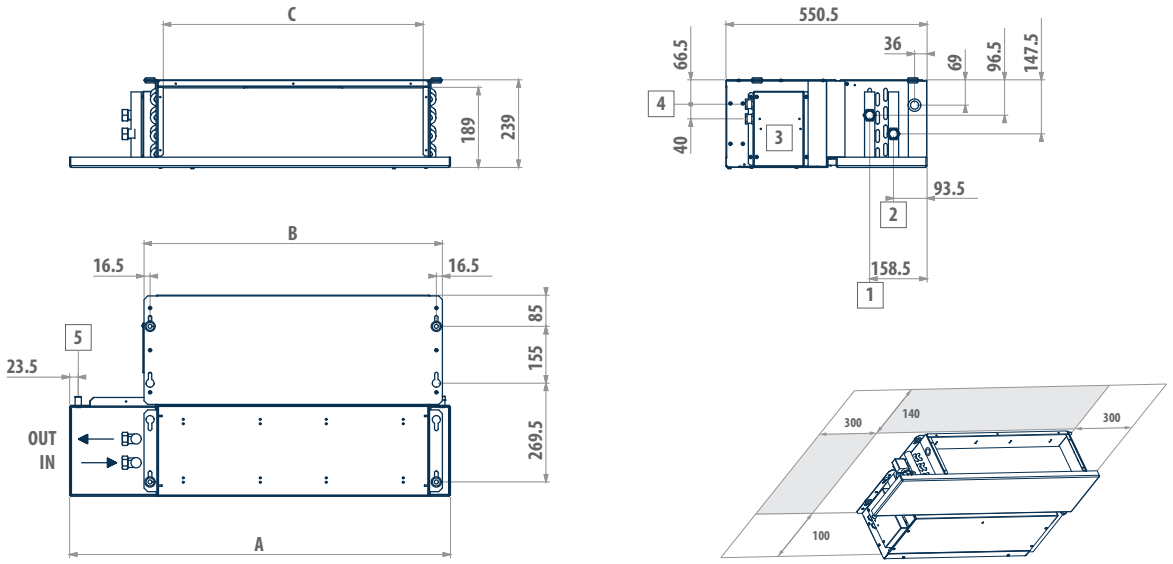

PWN	A	B	C	1	2	5
13 - 14 - 16	1039	814	709	3 / 4"	3 / 4"	17
23 - 24 - 26	1389	1164	1059	3 / 4"	3 / 4"	17
33 - 34 - 36	1739	1514	1409	3 / 4"	3 / 4"	17

LEGEND	
1	water outlet, Ø ¾" female gas
2	water inlet, Ø ¾" female gas
3	electric box
4	electric supply cable holder
5	drain outlet, Ø 17 mm

Medium available static pressure ducted hydronic units with BLDC motor

PWN i 2 - 6 kW



Inverter Technology

BLDC Brushless motor | 2 2-pipe system | 4 4-pipe system | Ducted | Centrifugal fan | ERGO Supervision

PLUS

- Inverter BLDC motors
- Reduced height across the entire range (240 mm)
- Available head up to 80 Pa
- Heat exchanger up to 6 rows
- Amply sized condensate drip tray
- Wide range of available accessories
- Can be connected to ERGO networks

Efficiency and versatility for recess ceiling mounted units

The range of PWNi duct units is designed for air conditioning systems in interiors requiring the installation of particularly versatile, low-noise, medium-head (up to 80Pa) units. Unlike the models equipped with traditional motors of the ON-OFF type, PWNi units feature fan assemblies with inverter-controlled permanent magnet BLDC motors. Adopting this type of motor makes it possible to obtain considerable reductions in electricity consumption and CO_2 emissions, as well as a considerable reduction in noise for enhanced comfort.
The DC Inverter technology allows to continuously adjust the air flow to the actual needs of the environment by considerably reducing the fluctuations in room temperature. By virtue of the continuous modulation of the air flow, once the right temperature and humidity conditions have been reached the fan speed is considerably reduced, resulting in decidedly low noise levels.
The heat exchanger is available in 3-, 4- or 6-row versions. The latter is particularly recommended for heat pump systems, in which the outlet water temperature is lower. The exchanger is normally mounted with connections on the left side (the wiring box is present on the same side), but it can be rotated by 180° on the installation site. By installing the accessory external module (additional MDF exchanger) it is possible to connect PWNi in 4-pipe systems.
PWNi units can find a place in commercial buildings, hotel rooms and meeting rooms. They have been conceived with a particular construction enabling the basic model to be expanded by installing a series of accessories so as to adapt PWNi to the needs of any horizontal recess ceiling-mount application.

The flexibility of the inverter control makes it possible to reduce the rotation speed to minimal values which almost completely eliminate the noise emissions of false-ceiling installations.

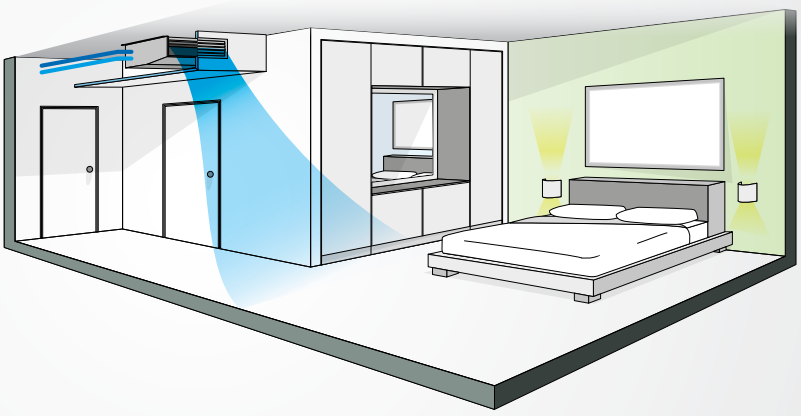



MAIN COMPONENTS

Structure

Built from galvanized sheet steel, designed for horizontal installation, insulated with class 1 self-extinguishing panels, complete with slots for rapid fixing.

Heat exchanger

High efficiency 3, 4 and 6 rows heat exchanger made with copper piping and aluminium fins blocked to pipings by mechanical expansion, provided with brass manifolds and air vent valve. The water connections are reversible.

Fans

Double suction centrifugal fans made with ABS or aluminium, with statically and dynamically balanced forward-curving blades, directly coupled to the electric motor.



BLDC electric motor

Permanent magnet motor The unit is equipped with an inverter board to control the motor, that makes it possible to precisely set the maximum rotation speed (control signal 0-10 V).

Water drip tray

Extended beyond the dimensions of the unit, it can collect condensate both from the heat exchanger and any regulating valves.



Air filter

Washable air filter, made of acrylic fibre, mounted on a galvanised sheet frame protected by a net, easily removable for maintenance operations. Class G3 air filter available as an optional accessory.

ACCESSORIES

CONTROL PANELS	
MCLE	MYCOMFORT LARGE electronic controller with display
DIST	MYCOMFORT controller spacer for wall mounting
EVODISP	EVO CLOCK Remote display
EVOBOARD	EVO 230V circuit board
MCSWE	Water sensor for EVO, MYCOMFORT BASE, MEDIUM, LARGE, and LED503 microprocessor controllers
MCSUE	Humidity sensor for EVO, MYCOMFORT MEDIUM and LARGE microprocessor controller
CSD	Recess mounted controller for opening and closing the SM motor-driven regulating louver
PLENUM AND AIR INLET AND OUTLET CONNECTORS	
PMA	Uninsulated air outlet/intake plenum with Ø 200 mm collars
PMAC	Insulated air outlet/intake plenum with Ø 200 mm collars
PAF	Uninsulated front air intake plenum with Ø 200 mm collars
RD	Straight uninsulated air inlet/outlet connector
RDC	Straight insulated air inlet/outlet connector
R90	90° uninsulated air inlet/outlet connector
R90C	90° insulated air inlet/outlet connector
CONNECTION HOSES AND PLUGS	
TFA	Uninsulated hose Ø 200 mm
TFM	Insulated hose Ø 200 mm
TP	Plastic plug Ø 200 mm
AIR OUTLET AND INTAKE DUCTS	
CA	Air intake duct with honeycomb grille
CAF	Air intake duct with honeycomb grille and G2 filter
CM	Insulated air outlet duct, with 2-way grille
AIR INTAKE AND OUTLET SILENCERS	
SIL	Plenum silencer for air intake/outlet
AIR OUTLET AND INTAKE GRILLES	
GM	Aluminium air outlet grille with 2-row fins, with frame
GA	Aluminium air intake grille, with frame
MOTOR DRIVEN ON/OFF AND MODULATING VALVES	
VK	ON-OFF 3-way motor driven valve (230V and 24V actuator), with hydraulic kit for standard and DF heat exchanger
VKM	Modulating 3-way motor driven valve (24V actuator), with hydraulic kit for standard and DF heat exchanger
KV	ON-OFF 2-way motor driven valve (230V and 24V actuator), with hydraulic kit for standard and DF heat exchanger
KVM	Modulating 2-way motor driven valve (24V actuator), with hydraulic kit for standard and DF heat exchanger
ACCESSORIES	
MDF	Additional heat exchanger module for hot water operation.
RE	Additional heating element for installation on board the unit, complete with safety devices
SM	Motor-driven external air intake louver
KSC	Condensate drainage pump
FG3	Air filter - class G3

Rated technical data

PWN i		13			14			16		
Fan speed		min	med	max	min	med	max	min	med	max
		4.1V	6.3V	8.6V	4.1V	6.3V	8.6V	4.1V	6.3V	8.6V
Air flow (E)	m³/h	184	297	371	184	297	371	184	297	371
Available static pressure (E)	Pa	19	50	78	19	50	70	19	50	70
Power supply	V-ph-Hz	230 - 1 - 50			230 - 1 - 50			230 - 1 - 50		
Power input (E)	W	12	27	46	12	27	46	12	27	46
Total cooling capacity (1) (E)	kW	1,28	1,98	2,43	1,52	2,38	2,93	1,70	2,60	3,24
Sensible cooling capacity (1) (E)	kW	0,93	1,44	1,76	1,04	1,64	2,01	1,12	1,75	2,18
Water flow	l/h	219	340	417	179	409	540	193	447	600
Water pressure drop (1) (E)	kPa	2	5	7	4	8	12	3	7	10
Heating capacity (2) (E)	kW	1,67	2,52	3,04	1,77	2,76	3,37	1,84	2,92	3,61
Water flow	l/h	219	340	417	179	409	540	193	447	600
Water pressure drop (2) (E)	kPa	2	4	7	3	7	10	9	5	8
MDF heating capacity (3) (E)	kW	1,97	2,64	2,98	1,95	2,64	2,98	1,95	2,64	2,98
Water flow	l/h	173	231	261	173	231	272	173	231	272
Water pressure drop (3) (E)	kPa	1	3	3	1	3	3	1	3	3
Standard coil - number of rows	n°	3			4			6		
MDF coil - Numer of rows	n°	1			1			1		
Total sound power level (4)	dB(A)	36	50	58	36	50	58	36	50	58
Inlet + radiated sound power level (4) (E)	dB(A)	36	49	55	37	49	55	33	46	55
Outlet sound power level (4) (E)	dB(A)	33	47	55	33	47	55	33	47	55

PWN i		23			24			26		
Fan speed		min	med	max	min	med	max	min	med	max
		4.2V	6.6V	8.9V	4.2V	6.6V	8.9V	4.2V	6.6V	8.9V
Air flow (E)	m³/h	283	576	722	331	576	722	331	576	722
Available static pressure (E)	Pa	16	50	70	16	50	79	16	50	79
Power supply	V-ph-Hz	230 - 1 - 50			230 - 1 - 50			230 - 1 - 50		
Power input (E)	W	18	46	76	18	46	76	18	46	76
Total cooling capacity (1) (E)	kW	1,86	3,84	4,66	2,35	3,92	4,93	2,72	4,76	5,88
Sensible cooling capacity (1) (E)	kW	1,38	2,74	3,31	1,70	2,84	3,52	1,87	3,24	4,01
Water flow	l/h	388	659	844	401	673	844	468	817	1007
Water pressure drop (1) (E)	kPa	3	9	13	2	4	8	3	8	12
Heating capacity (2) (E)	kW	2,54	4,71	5,65	3,10	5,07	6,18	3,25	5,46	6,71
Water flow	l/h	388	659	844	401	673	844	468	817	1007
Water pressure drop (2) (E)	kPa	2	8	11	2	5	8	3	7	10
MDF heating capacity (3) (E)	kW	3,57	4,97	5,61	3,57	4,97	5,61	3,57	4,97	5,61
Water flow	l/h	315	437	507	315	437	490	315	437	490
Water pressure drop (3) (E)	kPa	6	11	14	5	11	14	6	12	15
Standard coil - number of rows	n°	3			4			6		
MDF coil - Numer of rows	n°	1			1			1		
Total sound power level	dB(A)	36	52	60	37	52	60	37	52	60
Inlet + radiated sound power level (E)	dB(A)	38	53	57	34	51	57	34	51	57
Outlet sound power level (E)	dB(A)	39	49	57	34	49	57	34	49	57

(1) Water temperature 7-12°C, air temperature D.B. 27°C, W.B. 19°C (47% relative humidity)
(2) Inlet water temperature 50°C, water flow rate same as in cooling mode, air temperature 20°C
(3) Water temperature 70 / 60°C, air temperature 20°C
(4) Sound power measured according to standards ISO 3741 and ISO 3742
(E) EUROVENT certified data



Dimensional drawings

PWN i

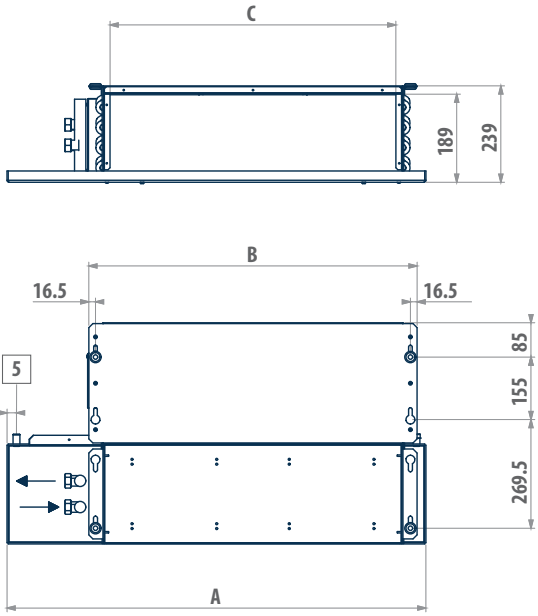

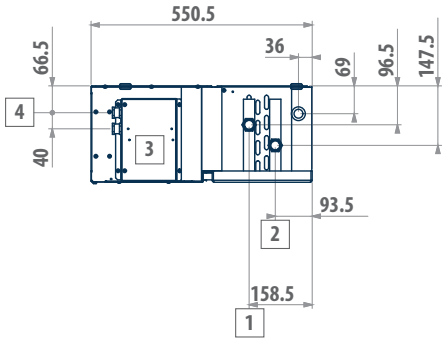

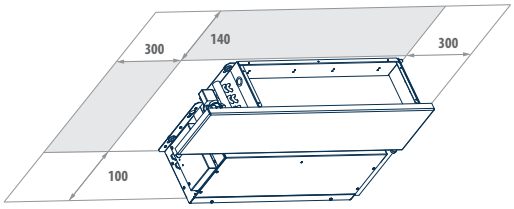

LEGEND

1	water outlet, Ø ¾" female gas
2	water inlet, Ø ¾" female gas
3	electric box
4	electric supply cable holder
5	drain outlet Ø 17 mm

PWN i	A	B	C	1	2	5
13 - 14 - 16	1039	814	709	3 / 4"	3 / 4"	17
23 - 24 - 26	1389	1164	1059	3 / 4"	3 / 4"	17

High available static pressure ducted hydronic units

UTN 3 - 23 kW





ERGO Supervision | Ducted | 2-pipe system | 4-pipe system | Centrifugal fan

Flexibility of installation to respond to every need

The UTN range of thermal ventilating units has been developed for air conditioning rooms where the use of ducted hydronic indoor units capable of assuring available heads of up to 180 Pa and cooling capacities of 3 to 23 kW is required. The units are characterised by a high flexibility of installation, as they can in fact be positioned either vertically or horizontally and the orientation of the air intake in the rear or front part of the unit itself can be modified by simply moving the inspection panel. All units have a standard configuration for the intake of fresh air and slots for rapidly fixing them to the wall or ceiling. Their reduced height (280 mm up to size 16 and 350 mm for larger sizes) enables them to be accommodated in normal false ceiling and the availability of a wide range of plumbing and ventilation accessories makes it easy to integrate them into air conditioning systems. The units are available in standard and high-efficiency models, depending on the finned block exchanger used, so that they can be better adapted to the needs of the room to be air-conditioned.

PLUS

- ✔ Compact dimensions (height 280 mm up to size 16 and 350 mm for larger sizes)
- ✔ Vertical and horizontal installation
- ✔ Wide range of available accessories for simple integration into the system
- ✔ Available head up to 180 Pa
- ✔ High flexibility of installation
- ✔ Can be integrated into the ERGO

AVAILABLE VERSIONS

UTN

Thermal ventilating unit suitable for 2-pipe systems

UTN DF

Thermal ventilating unit suitable for 4-pipe systems (2 heat exchangers)

UTN DP

The version with double panelling is made with pre-painted sheet steel insulated with class 0 fire-resistant rockwool.

Comfort and hygiene

UTN can be equipped with the exclusive ionisation system developed by Galletti to eliminate every trace of bacterial contamination from air-conditioned rooms and from the hydronic indoor unit itself.

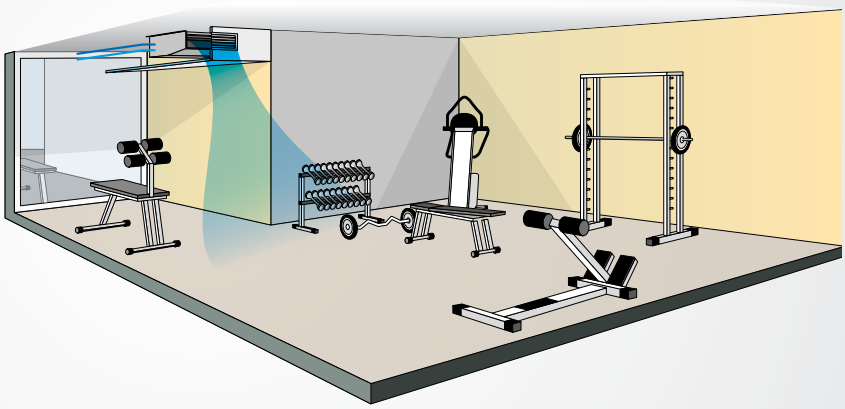



MAIN COMPONENTS

Structure

Made of galvanized sheet steel insulated with sound-deadening, heat-insulating, self-extinguishing closed-cell material to reduce noise emissions and prevent the formation of condensate on the outside surface.

Heat exchanger

It is composed of copper tubing and aluminium fins fixed by expansion.
The water connections are reversible.
An additional exchanger is available for installing the unit in 4-pipe systems.

Fan

The aluminium fans are of the centrifugal type, with double suction and staggered blades to reduce noise emissions. They are statically and dynamically balanced to minimize the stresses transmitted to the motor shaft.



Filter module

The air filter, made of regenerable acrylic fibre, is available as an accessory in filtration classes G2 or G4.



Electric motor

Three-speed electrical motor, mounted on vibration damping couplings, directly connected to the fans, with permanently activated capacitor and winding thermal protection.

Condensate collection and drainage system

It consists of two insulated galvanized sheet steel trays designed for horizontal and vertical installation.

ACCESSORIES

CONTROL PANELS AND THERMOSTATS	
CD	Recess wall-mounted speed selector
CDE	Wall-mounted speed selector
TD	Wall-mounted speed selector, thermostat and summer/winter selecting switch
TDC	Wall-mounted speed selector and thermostat
TD4T	Wall-mounted speed selector, thermostat and summer/winter selecting switch for 2 or 4-pipe systems with valves
MCBE	MYCOMFORT BASE electronic controller with display
MCME	MYCOMFORT MEDIUM electronic controller with display
MCLE	MYCOMFORT LARGE electronic controller with display
EVO	Wall-mounted microprocessor controller
MCSWE	Water/air sensor for MYCOMFORT BASE, MYCOMFORT MEDIUM, MYCOMFORT LARGE and LED503 microprocessor controllers.
LED503	Recess wall-mounted microprocessor controller
TC	Thermostat for minimum water temperature in heating mode, mounted on the heat exchanger
KP	Power interface for connecting in parallel up to 4 fan coils to one controller
IPM	Circuit board for connection of UTN 30, UTN 30 A, UTN 40 and UTN 40A
TA	Ambient thermostat
TA2	Ambient thermostat with summer/winter selecting switch
CSD	Recess mounted controller for opening and closing the PA 90 motor-driven regulating louver
AIR INTAKE MODULES WITH FILTER	
MAF	Air intake module with G2 flat filter
MAFO	Air intake module with G4 undulated filter
AIR INTAKE AND OUTLET JUNCTION PANELS	
PCOC	Junction panel with rectangular duct
PCOF	Junction panel with flexible circular duct Ø 200
G90	90° elbow outlet and inlet connector

MOTOR-DRIVEN VALVES AND DRIP TRAYS	
V	3-way motor-driven valve
M	ON/OFF and modulating motors, modulating motors for motor driven valves V
R	Hydraulic connector kit for installation of V valve
VRCV	Water drip tray for vertical installation UTN
VRCH	Water drip tray for horizontal installation UTN
KSC1	Condensate drainage pump
HOT WATER POST-HEATING COILS	
BP	Post-heating kit with hot water coil
ELECTRICAL HEATING ELEMENTS	
RE	Heating elements, safety devices, power relay box
MOTOR DRIVEN EXTERNAL AIR INTAKE LOUVER	
PA90	Motor-driven external air intake louver
VIBRATION-DAMPING COUPLINGS	
GA	PVC vibration-damping coupling
GAT	Heat-resistant silicone-coated cloth vibration-damping coupling
HOSES - PLUGS	
TFA	Uninsulated hose Ø 200 mm
TFM	Insulated hose Ø 200 mm
TP	Plastic plug Ø 200 mm
AIR INTAKE AND OUTLET DUCTS	
CA	Air intake duct with honeycomb grille
CAF	Air intake duct with honeycomb grille and G2 filter
CM	Insulated air outlet duct, with 2-way grille
AIR OUTLET AND INTAKE GRILLES	
GM	Aluminium air outlet grille, with subframe
GR	Aluminium air intake grille, with subframe

Rated technical data

UTN		0 6			0 6A			0 8			08A		
Fan speed		min	med	max	min	med	max	min	med	max	min	med	max
Air flow (E)	m³/h	364	490	614	360	482	600	555	747	800	552	736	864
Available static pressure (E)	Pa	28	50	75	28	50	75	29	50	65	30	50	65
Total cooling capacity (1) (E)	kW	2,02	2,58	3,03	2,30	3,00	3,58	2,87	3,54	3,91	3,42	4,27	4,76
Sensible cooling capacity (1) (E)	kW	1,55	1,99	2,35	1,71	2,25	2,71	2,23	2,77	3,09	2,58	3,26	3,67
Water flow (1)	l/h	360	461	549	413	539	651	508	637	708	606	770	864
Water pressure drop (1) (E)	kPa	5	8	11	4	6	9	10	14	17	8	12	14
Heating capacity (2) (E)	kW	2,61	3,27	3,81	2,94	3,75	4,43	3,63	4,41	4,85	4,25	5,22	5,79
Water flow (2)	l/h	360	461	549	413	539	651	508	637	708	606	770	864
Water pressure drop (2) (E)	kPa	4	7	9	3	5	7	8	12	14	7	10	12
DF heating capacity (4 pipes) (3) (E)	kW	3,03	3,54	3,95	5,20	7	3,92	3,77	4,34	4,63	3,76	4,31	4,60
Water flow (3)	l/h	266	310	346	457	582	344	331	382	407	331	378	403
Water pressure drop (3) (E)	kPa	4	6	7	4	6	7	7	8	9	7	8	9
Standard heat exchanger - rows	n°		3			4			3			4	
DF heat exchanger - rows	n°		1			1			1			1	
Power supply	V/ph/Hz	230 / 1 / 50											
Maximum power input (E)	W	84	122	188	84	122	188	135	185	234	135	185	265
Sound power (4)	dB(A)	48	57	63	48	57	63	54	61	66	54	61	66
Sound power air outlet (4) (E)	dB(A)	46	54	61	46	54	61	52	59	62	52	59	64
Sound power air inlet + radiated (4) (E)	dB(A)	45	53	59	45	53	59	51	58	58	51	58	63

UTN		12			12A			16			16 A		
Fan speed		min	med	max	min	med	max	min	med	max	min	med	max
Air flow (E)	m³/h	1124	1290	1473	1097	1257	1424	1318	1553	1890	1309	1538	1851
Available static pressure (E)	Pa	40	50	59	41	50	59	38	50	67	38	50	66
Total cooling capacity (1) (E)	kW	5,32	5,77	6,16	5,88	6,37	6,80	6,32	7,01	7,82	6,96	7,79	8,74
Sensible cooling capacity (1) (E)	kW	4,00	4,32	4,62	4,45	4,85	5,19	5,13	5,77	6,54	5,52	6,24	7,08
Water flow (1)	l/h	984	1088	1198	1086	1206	1326	1160	1310	1510	1286	1467	1697
Water pressure drop (1) (E)	kPa	18	21	24	15	17	19	17	20	24	11	13	16
Heating capacity (2) (E)	kW	6,67	7,20	7,66	7,50	8,11	8,63	7,74	8,52	9,45	8,69	9,62	10,7
Water flow (2)	l/h	984	1088	1198	1086	1206	1326	1160	1310	1510	1286	1467	1697
Water pressure drop (2) (E)	kPa	15	17	19	13	15	18	13	16	20	9	10	13
DF heating capacity (4 pipes) (3) (E)	kW	6,26	6,65	7,02	6,19	6,57	6,92	8,35	9,00	9,81	8,32	8,96	9,72
Water flow (3)	l/h	551	583	616	544	576	608	731	788	860	731	785	853
Water pressure drop (3) (E)	kPa	16	17	19	13	15	16	11	12	15	26	30	34
Standard heat exchanger - rows	n°		3			4			3			4	
DF heat exchanger - rows	n°		1			1			1			1	
Power supply	V/ph/Hz	230 / 1 / 50											
Maximum power input (E)	W	345	385	460	345	385	460	290	380	505	290	380	505
Sound power (4)	dB(A)	59	63	69	61	63	69	62	67	72	62	67	72
Sound power air outlet (4) (E)	dB(A)	56	60	66	56	60	66	60	64	70	60	64	70
Sound power air inlet + radiated (4) (E)	dB(A)	55	59	65	59	59	65	58	63	69	58	63	69

(1) Water temperature 7-12°C, air temperature D.B. 27°C, W.B. 19°C (47% relative humidity)
(2) Inlet water temperature 50°C, water flow rate same as in cooling mode, air temperature 20°C
(3) Water temperature 70 / 60°C, air temperature 20°C
(4) Sound power measured according to standards ISO 3741 and ISO 3742
(E) EUROVENT certified data



Rated technical data

UTN		22			22 A			30			30 A		
Fan speed		min	med	min	min	med	min	min	med	min	min	med	min
Air flow (E)	m³/h	1591	2101	2758	1585	2101	2785	2154	2739	3335	2136	2700	3302
Available static pressure (E)	Pa	30	50	78	31	50	75	31	50	74	32	50	74
Total cooling capacity (1) (E)	kW	8,78	10,7	12,6	9,57	11,7	13,8	12,5	14,9	17,2	13,8	16,5	19,0
Sensible cooling capacity (1) (E)	kW	6,72	8,28	9,97	7,13	8,85	10,6	9,48	11,5	13,5	10,3	12,5	14,8
Water flow (1)	l/h	1592	1973	2407	1741	2177	2643	2194	2631	3040	2422	2901	3359
Water pressure drop (1) (E)	kPa	15	21	29	12	17	22	21	29	37	27	37	48
Heating capacity (2) (E)	kW	10,8	13,0	15,2	11,7	14,1	16,5	15,2	18,1	20,8	16,5	19,7	22,9
Water flow (2)	l/h	1592	1973	2407	1741	2177	2643	2194	2631	3040	2422	2901	3359
Water pressure drop (2) (E)	kPa	12	17	23	10	14	18	17	23	30	22	30	39
DF heating capacity (4 pipes) (3) (E)	kW	12,9	15,3	17,9	12,9	15,3	18,0	17,2	19,9	22,5	17,1	19,8	22,3
Water flow (3)	l/h	1130	1339	1573	1127	1339	1580	1508	1750	1969	1501	1735	1958
Water pressure drop (3) (E)	kPa	8	11	15	8	11	15	11	14	17	11	14	17
Standard heat exchanger - rows	n°		3			4			4			5	
DF heat exchanger - rows	n°		1"			2			2			2	
Power supply	V/ph/Hz	230 / 1 / 50											
Maximum power input (E)	W	1130	1339	1573	1127	1339	1580	1508	1750	1969	1501	1735	1958
Sound power (4)	dB(A)	60	67	74	60	67	74	69	73	78	69	73	78
Sound power air outlet (4) (E)	dB(A)	58	65	72	58	65	72	67	71	76	67	71	76
Sound power air inlet + radiated (4) (E)	dB(A)	57	64	71	57	64	71	66	70	75	66	70	75

UTN		40			40 A		
Fan speed		min	med	min	min	med	min
Air flow (E)	m³/h	3472	3706	4422	3102	3622	4287
Available static pressure (E)	Pa	35	50	71	35	50	71
Total cooling capacity (1) (E)	kW	17,4	18,2	20,7	18,1	20,4	23,2
Sensible cooling capacity (1) (E)	kW	13,8	14,6	16,7	14,1	16,1	18,6
Water flow (1)	l/h	2983	3422	3977	3339	3840	4455
Water pressure drop (1) (E)	kPa	20	21	26	16	20	25
Heating capacity (2) (E)	kW	22,0	39,2	44,2	38,2	42,9	48,6
Water flow (2)	l/h	2983	3422	3977	3339	3840	4455
Water pressure drop (2) (E)	kPa	18	21	27	17	21	26
DF heating capacity (4 pipes) (3) (E)	kW	20,9	23,0	25,4	20,7	22,7	24,9
Water flow (3)	l/h	1836	2016	2226	1818	1989	2188
Water pressure drop (3) (E)	kPa	12	14	16	11	13	16
Standard heat exchanger - rows	n°		4			5	
DF heat exchanger - rows	n°		1"			1"	
Power supply	V/ph/Hz	230 / 1 / 50					
Maximum power input (E)	W	68	71	75	68	71	75
Sound power (4)	dB(A)	70	74	79	70	74	79
Sound power air outlet (4) (E)	dB(A)	68	71	75	68	71	75
Sound power air inlet + radiated (4) (E)	dB(A)	67	72	75	67	72	75

(1) Water temperature 7-12°C, air temperature D.B. 27°C, W.B. 19°C (47% relative humidity)
(2) Inlet water temperature 50°C, water flow rate same as in cooling mode, air temperature 20°C
(3) Water temperature 70 / 60°C, air temperature 20°C
(4) Sound power measured according to standards ISO 3741 and ISO 3742
(E) EUROVENT certified data

Dimensional drawings

UTN 06 - 16

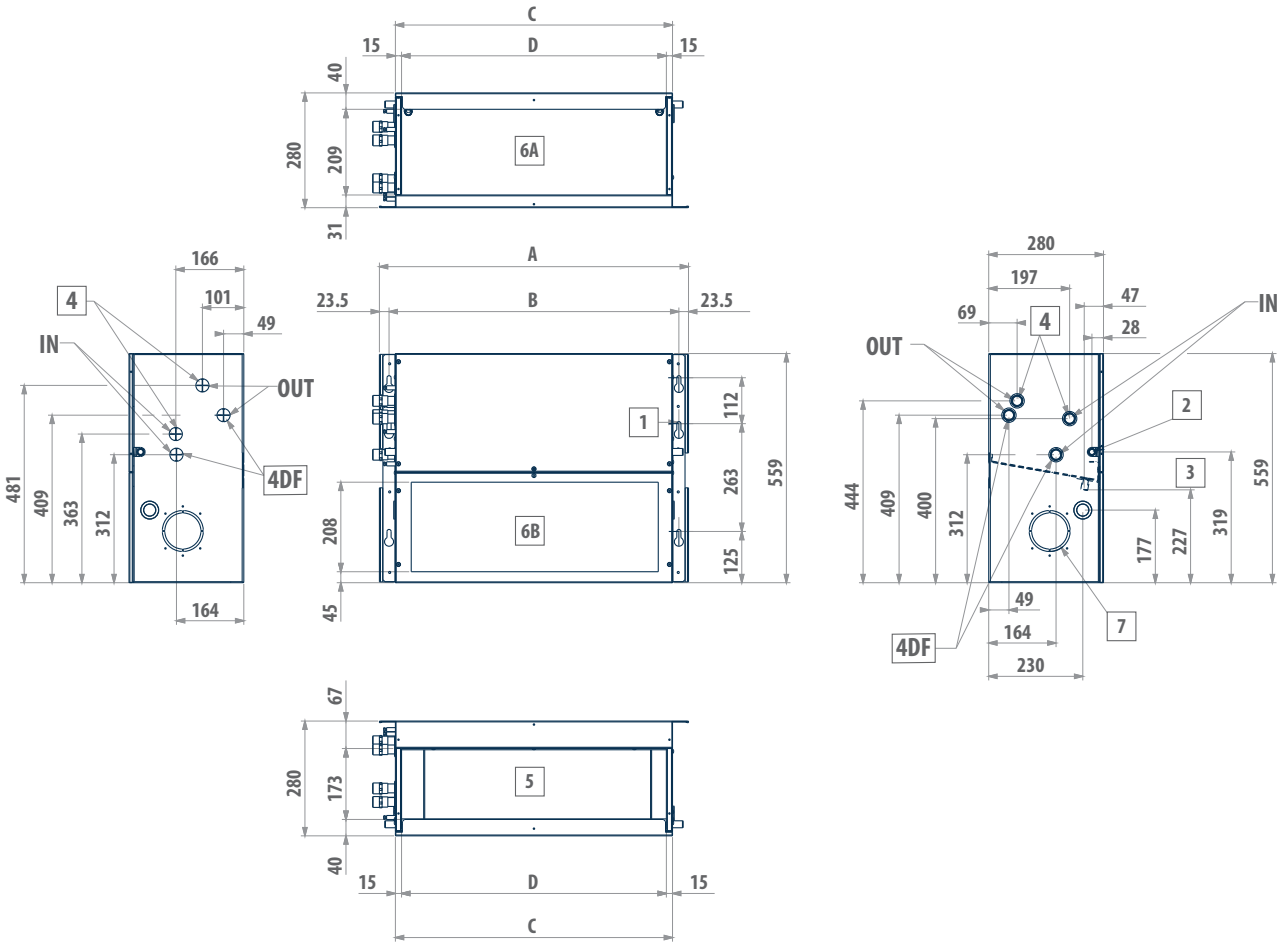

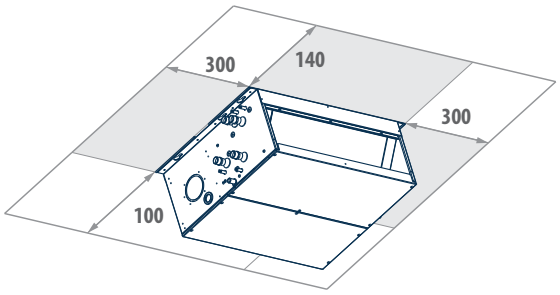

LEGEND	
1	Nr.6 quick-coupling slots
2	Drain outlet for horizontal installation
3	Drain outlet for vertical installation
4	Water connections on the right
4DF	Additional heat exchanger water connections
5	Air outlet
6	Air intake 6-A supply condition 6-B modifiable during installation
7	Circular pre-cut slot (Ø 100 mm) for intake of external air

UTN	A	B	C	D	2	3	4	4DF
06 - 06A	754	707	676	646	17	17	3 / 4"	3 / 4"
08 - 08A	754	707	676	646	17	17	3 / 4"	3 / 4"
12 - 12A	964	917	886	856	17	17	3 / 4"	3 / 4"
16 - 16A	1174	1127	1096	1066	17	17	3 / 4"	3 / 4"



Dimensional drawings

UTN 22 - 40

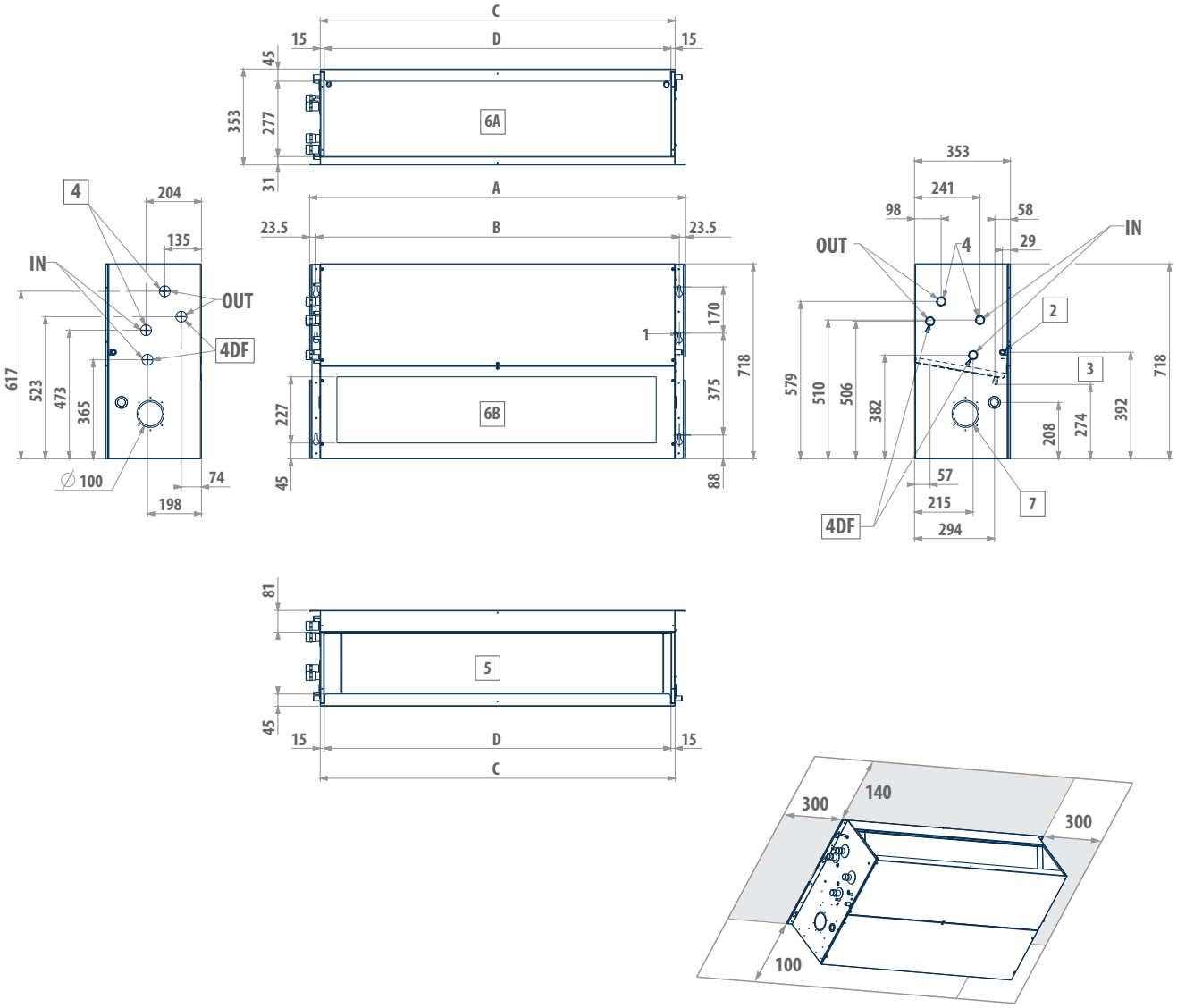

LEGEND	
1	Nr.6 quick-coupling slots
2	Drain outlet for horizontal installation
3	Drain outlet for vertical installation
4	Water connections on the right
4DF	Additional heat exchanger water connections
5	Air outlet
6	Air intake
	6-A supply condition
	6-B modifiable during installation
7	Circular pre-cut slot (Ø 100 mm) for intake of external air

UTN	A	B	C	D	2	3	4	4DF
22 - 22A	1174	1127	1096	1066	17	17	1"	1"
30 - 30A	1384	1337	1306	1276	17	17	1"	1"
40 - 40A	1594	1547	1516	1486	17	17	1"	1"

High available static pressure ducted hydronic units with BLDC motor

UTN i 4 - 10 kW



Inverter Technology

BLDC Brushless motor | Ducted | 2 2-pipe system | 4 4-pipe system | Centrifugal fan | ERGO Supervision

High efficiency and low noise emissions for ducted applications

The thermal ventilating units of the UTNi range with inverter motors and cooling capacities of 4 to 10 kW represent an evolution of the UTN series: keeping in pace with current legislation on energy savings and equipment efficiency and the most recent technological developments in the realm of electric motors, Galletti offers ducted units equipped with inverter-controlled permanent magnet BLDC motors. This solution makes it possible to reduce electricity consumption by up to 70% compared to a traditional asynchronous motor and at the same time offers the possibility of achieving a precise regulation of air flow, thanks to its ability to vary the number of fan revolutions in a continuous and efficient manner. The particular features which characterize the UTN series, namely, the height of 280 mm to enable the units to be accommodated in false ceilings, flexibility of installation and connection to air ducts and wide selection of accessories, are maintained to ensure the same standards of quality. Moreover, the availability of heat exchangers with a large number of rows makes it possible to use a low-temperature thermal carrier fluid in the heating mode, which means further energy savings.

PLUS

- Permanent magnet BLDC motor
- Low electricity consumption
- Easy setup of ventilation section
- Reduced height across the entire range (280 mm)
- Vertical and horizontal installation
- Vast range of available accessories
- High flexibility of installation

AVAILABLE VERSIONS

UTN i

Thermal ventilating unit suitable for 2-pipe systems

UTN i DF

Thermal ventilating unit suitable for 4-pipe systems (2 heat exchangers)

UTN i DP

The version with double panelling is made with pre-painted sheet steel insulated with class 0 fire-resistant rockwool.

Comfort and quiet operation

Thanks to the possibility of regulating the rotation speed of the motor with high precision, UTN i is well-suited to interiors where keeping noise levels low is a must.

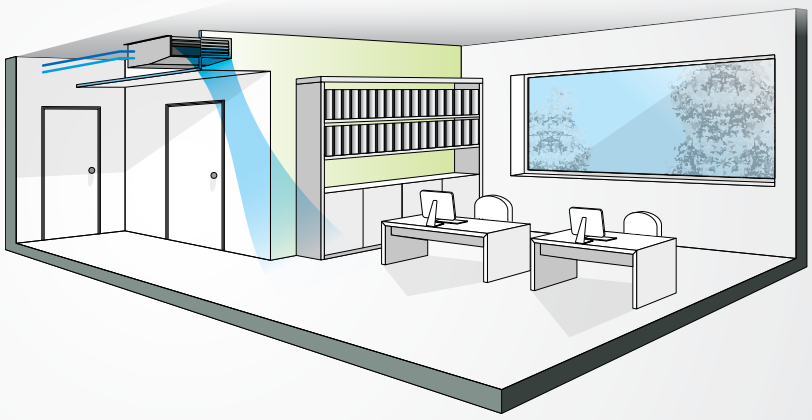



MAIN COMPONENTS

Structure

Made of galvanized sheet steel insulated with sound-deadening, heat-insulating, self-extinguishing closed-cell material to reduce noise emissions and prevent the formation of condensate on the outside surface.

Heat exchanger

It is composed of copper tubing and aluminium fins fixed by expansion.
The water connections are reversible.
An additional exchanger is available for installing the unit in 4-pipe systems.

Fan

The aluminium fans are of the centrifugal type, with double suction and staggered blades to reduce noise emissions. They are statically and dynamically balanced to minimize the stresses transmitted to the motor shaft.



BLDC electric motor

Permanent magnet motor The unit is equipped with an inverter board to control the motor, that makes it possible to precisely set the maximum rotation speed (control signal 0-10 V).

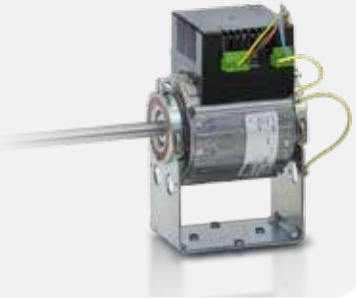

Condensate collection and drainage system

It consists of two insulated galvanized sheet steel trays designed for horizontal and vertical installation.

Filter module

The air filter, made of regenerable acrylic fibre, is available as an accessory in filtration classes G2 or G4.

ACCESSORIES

CONTROL PANELS AND THERMOSTATS	
MCLE	MYCOMFORT LARGE
EVO	Wall-mounted microprocessor controller
MCSWE	Water/air sensor for MYCOMFORT BASE, MYCOMFORT MEDIUM, MYCOMFORT LARGE and LED503 microprocessor controllers.
AIR INTAKE MODULES WITH FILTER	
MAF	Air intake module with G2 flat filter
MAFO	Air intake module with G4 undulated filter
AIR INTAKE AND OUTLET JUNCTION PANELS	
PCOC	Junction panel with rectangular duct
PCOF	Junction panel with flexible circular duct Ø 200
G90	90° elbow outlet and inlet connector
MOTOR-DRIVEN VALVES AND DRIP TRAYS	
V	3-way motor-driven valve
M	ON/OFF and modulating motors, modulating motors for motor driven valves V
R	Hydraulic connector kit for installation of valve
VRCV	Water drip tray for vertical installation UTN
VRCH	Water drip tray for horizontal installation UTN
KSC1	Condensate drainage pump
HOT WATER POST-HEATING COILS	
BP	Post-heating kit with hot water coil

ELECTRICAL HEATING ELEMENTS	
RE	Heating elements, safety devices, power relay box
MOTOR DRIVEN EXTERNAL AIR INTAKE LOUVER	
PA90	Motor-driven external air intake louver
VIBRATION-DAMPING COUPLINGS	
GA	PVC vibration-damping coupling
GAT	Heat-resistant silicone-coated cloth vibration-damping coupling
HOSES - PLUGS	
TFA	Uninsulated hose Ø 200 mm
TFM	Insulated hose Ø 200 mm
TP	Plastic plug Ø 200 mm
AIR INTAKE AND OUTLET DUCTS	
CA	Air intake duct with honeycomb grille
CAF	Air intake duct with honeycomb grille and G2 filter
CM	Insulated air outlet duct, with 2-way grille
AIR OUTLET AND INTAKE GRILLES	
GM	Aluminium air outlet grille, with subframe
GR	Aluminium air intake grille, with subframe

Rated technical data

UTN i		08			08A			12			12A		
Fan speed		min	med	min	min	med	min	min	med	min	min	med	min
Air flow (E)	m³/h	555	747	800	552	736	864	1124	1290	1473	1097	1257	1424
Available static pressure (E)	Pa	29	50	65	30	50	65	40	50	59	41	50	59
Total cooling capacity (1) (E)	kW	2,87	3,54	3,91	3,42	4,27	4,76	5,32	5,77	6,16	5,88	6,37	6,80
Sensible cooling capacity (1)	kW	2,23	2,77	3,09	2,58	3,26	3,67	4,00	4,32	4,62	4,45	4,85	5,19
Water flow (1)	l/h	508	637	708	606	770	864	984	1088	1198	1086	1206	1326
Water pressure drop (1) (E)	kPa	10	14	17	8	12	14	18	21	24	15	17	19
Heating capacity (2) (E)	kW	3,63	4,41	4,85	4,25	5,22	5,79	6,67	7,20	7,66	7,50	8,11	8,63
Water flow (2)	l/h	508	637	708	606	770	864	984	1088	1198	1086	1206	1326
Water pressure drop (2) (E)	kPa	8	12	14	7	10	12	15	17	19	13	15	18
DF heating capacity (4 pipes) (3) (E)	kW	3,77	4,34	4,63	3,76	4,31	4,60	6,26	6,65	7,02	6,19	6,57	6,92
Water flow (3)	l/h	331	382	407	331	378	403	551	583	616	544	576	608
Water pressure drop (3) (E)	kPa	7	8	9	7	8	9	16	17	19	13	15	16
Standard heat exchanger - rows	n°		3			4			3			4	
DF heat exchanger - rows	n°		1			1			1			1	
Power supply	V/ph/Hz	230 / 1 / 50											
Maximum power input (E)	W	40	73	112	40	73	112	102	125	152	102	125	152
Sound power (4)	dB(A)	54	61	66	54	61	66	59	63	69	61	63	69
Sound power air outlet (4) (E)	dB(A)	52	59	63	52	59	64	56	60	66	56	60	66
Sound power air inlet + radiated (4) (E)	dB(A)	51	58	58	51	58	63	55	59	65	59	59	65

UTN i		16			16 A		
Fan speed		min	med	min	min	med	min
Air flow (E)	m³/h	1318	1553	1890	1309	1538	1851
Available static pressure (E)	Pa	38	50	67	38	50	66
Total cooling capacity (1) (E)	kW	6,32	7,01	7,82	6,96	7,79	8,74
Sensible cooling capacity (1)	kW	5,13	5,77	6,54	5,52	6,24	7,08
Water flow (1)	l/h	1160	1310	1510	1286	1467	1697
Water pressure drop (1) (E)	kPa	17	20	24	11	13	16
Heating capacity (2) (E)	kW	7,74	8,52	9,45	8,69	9,62	10,7
Water flow (2)	l/h	1160	1310	1510	1286	1467	1697
Water pressure drop (2) (E)	kPa	13	16	20	9	10	13
DF heating capacity (4 pipes) (3) (E)	kW	8,35	9,00	9,81	8,32	8,96	9,72
Water flow (3)	l/h	731	788	860	731	785	853
Water pressure drop (3) (E)	kPa	11	12	15	26	30	34
Standard heat exchanger - rows	n°		3			4	
DF heat exchanger - rows	n°		1			1	
Power supply	V/ph/Hz	230 / 1 / 50					
Maximum power input (E)	W	124	170	248	124	170	248
Sound power (4)	dB(A)	62	67	72	62	67	72
Sound power air outlet (4) (E)	dB(A)	60	64	70	60	64	70
Sound power air inlet + radiated (4) (E)	dB(A)	58	63	69	58	63	69

(1) Water temperature 7-12°C, air temperature D.B. 27°C, W.B. 19°C (47% relative humidity)
(2) Inlet water temperature 50°C, water flow rate same as in cooling mode, air temperature 20°C
(3) Water temperature 70 / 60°C, air temperature 20°C
(4) Sound power measured according to standards ISO 3741 and ISO 3742
(E) EUROVENT certified data



Dimensional drawings

UTN i

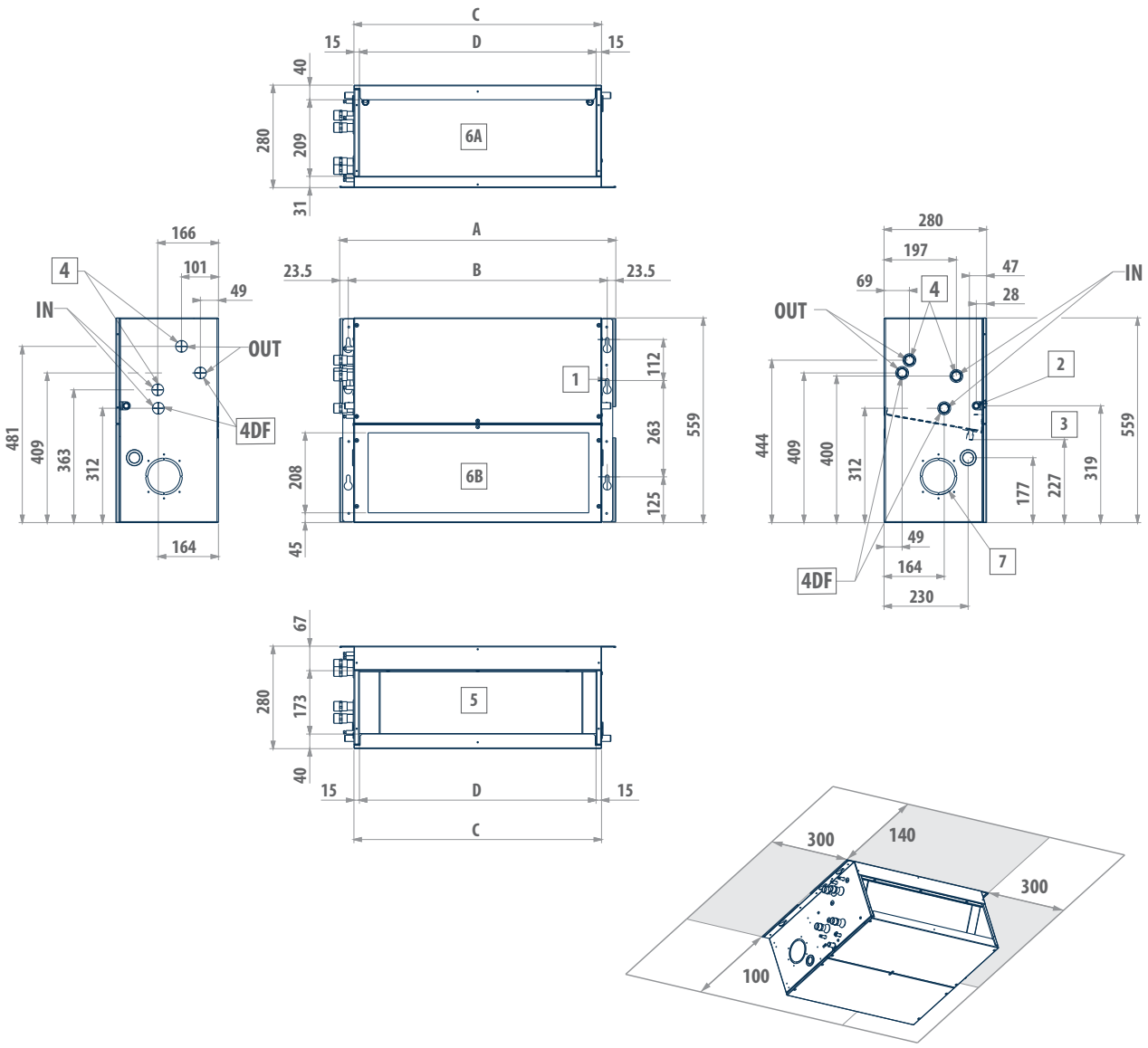

LEGEND	
1	Nr.6 quick-coupling slots
2	Drain outlet for horizontal installation
3	Drain outlet for vertical installation
4	Water connections on the right
4DF	Additional heat exchanger water connections
5	Air outlet
6	Air intake 6-A supply condition 6-B modifiable during installation
7	Circular pre-cut slot (Ø 100 mm) for intake of external air

UTN i	A	B	C	D	2	3	4	4DF
06 - 06A	754	707	676	646	17	17	3 / 4"	3 / 4"
08 - 08A	754	707	676	646	17	17	3 / 4"	3 / 4"
12 - 12A	964	917	886	856	17	17	3 / 4"	3 / 4"
16 - 16A	1174	1127	1096	1066	17	17	3 / 4"	3 / 4"

Galletti
AIR CONDITIONING



FAN HEATERS

AREO	p. 118
AREO i	p. 124
DST	p. 128

Fan heaters

AREO 8 - 101 kW





Vertical installation | Horizontal installation | 2-pipe system | Heating

Hygrothermal comfort in the industrial and commercial sectors

In line with recent regulatory developments regarding energy efficiency, Galletti is updating its offering of fan heaters for heating systems to be used in industrial and commercial environments of any volume.
The new AREO, which was designed to meet the stringent requirements of the ERP Directive, retains unchanged the distinctive aspects of the original design, that is, extreme reliability and sturdiness.
AREO's cover, which is made of pre-painted steel sheet, possesses an original design with a rounded shape that enhances its aesthetic form.
The AREO range consists of 18 models that can be either wall mounted (horizontal air flow) or ceiling mounted (vertical air flow).
The units are available in 6 sizes with 2-, 3- or 4-row heat exchangers ensuring an efficient performance with hot water supplied by a boiler or heat pump (4-row models).

PLUS

- Low noise levels
- Wide operating range (up to 60 °C intake air)
- Axial fan with blades with an aerodynamic profile (HyBlade® technology)
- Electric motor, class F, approved for continuous operation
- Economical version with single-speed and single-phase power supply



AVAILABLE VERSIONS

Single-phase and three-phase electric power supply

AREO P
Fan heaters for hot water heating, with side water connections.

AREO H
Fan heaters for hot water heating, with vertical water connections, for replacement of indoor units installed in existing systems.

AREO S
Fan heaters for steam heating, with vertical water connections.

AREO L
Fan heaters for hot water heating, equipped with air-curtain diffuser, ceiling mounted.



MAIN COMPONENTS

Fan drive assembly

The motor and fan are a single integrated unit optimized to achieve maximum aeraulic efficiency. In fact, conformity to ERP2015 is guaranteed, even for the versions with single-phase power supply.

Electric motor

Tropicalized motor directly coupled to an external rotor, standard, with the following features:
- equipped with internal thermal protection
- windings in class F
- protection rating IP54
- maintenance-free ball bearings

Axial fan

With blades with an optimized aerodynamic profile (HyBlade® technology), statically balanced, inserted in a housing that enhances aeraulic performance and minimizes noise.



Cabinet

Made of pre-painted steel sheet, complete with ABS corners, and manually adjustable aluminum baffles located on the air outlet for optimum distribution in the room to be heated.



Safety cage

Made of electrogalvanised steel wire, it supports the motor and is fixed to the cabinet by means of vibration-damping supports.

Heat exchanger

Made of copper pipes and aluminium fins of high thermal conductivity to optimize heat exchange.

ACCESSORIES

CONTROL PANELS	
CST	Delta/star selector for installation in electric panels
CSTP	Delta/star selector for wall mounting
TA	Ambient thermostat
CSD	Wall-mounted potentiometer for opening and closing the PAE MM motor driven louver
MOUNTING BOARDS	
DFP	Wall mounting board
DFC	Column mounting board
DFO	Adjustable wall/column mounting board
PROTECTIVE MESH FOR GYMS (BALL SHIELD)	
R	Protective mesh for gyms

DIFFUSERS	
DO	Two-row fin diffuser
LA	Air curtain diffuser (only for AREO L)
EXTERNAL AIR INTAKE	
PAE	External air intake
PAEM	Manual mixing louver (only for AREO P)
PAEMM	Motor driven mixer louver, modulating motor, power supply 24V, spring return (only for AREO P)
EXTERNAL AIR INTAKE RAIN PROTECTION GRILLE	
GR	External air intake rain protection grille

Rated technical data

AREO P		12	12	13	13	14	14
Power supply	V-ph-Hz	230-1-50	230-1-50	230-1-50	230-1-51	230-1-50	230-1-50
Speed rotor	n ° pole	4	6	4	6	4	6
Motor connections	-	Mono	Mono	Mono	Mono	Mono	Mono
Air flow	m^3/h	1280	1000	1140	900	1040	800
Heating capacity (1)	kW	9,77	8,48	12,4	10,7	14,2	11,9
Water flow (1)	l/h	863	749	1097	946	1252	1047
Water pressur drop (1)	kPa	29	23	22	17	17	12
Sound power level (2)	dB(A)	64	59	64	59	65	60
Power input	W	67	49	69	50	70	51

AREO P		22	22	23	23	24	24
Power supply	V-ph-Hz	230-1-50	230-1-50	230-1-50	230-1-51	230-1-50	230-1-50
Speed rotor	n ° pole	4	6	4	6	4	6
Motor connections	-	Mono	Mono	Mono	Mono	Mono	Mono
Air flow	m^3/h	3020	2100	2630	1850	2600	1800
Heating capacity (1)	kW	19,9	16,2	25,6	20,6	28,9	22,9
Water flow (1)	l/h	1754	1432	2256	1820	2555	2022
Water pressur drop (1)	kPa	23	16	29	20	19	13
Sound power level (2)	dB(A)	76	64	76	65	77	65
Power input	W	198	110	210	114	212	120

AREO P		32	32	32	33	33	33	34	34	34
Power supply	V-ph-Hz	230-1-50	400-3-50	400-3-50	230-1-50	400-3-50	400-3-50	230-1-50	400-3-50	400-3-50
Speed rotor	n ° pole	4	4	6	4	4	6	4	4	6
Motor connections	-	Mono	Delta	Star	Mono	Delta	Star	Mono	Delta	Star
Air flow	m^3/h	4500	4300	3200	4150	4000	2900	4050	3900	2800
Heating capacity (1)	kW	35,6	34,7	29,2	39,5	38,6	31,8	45,1	44,0	35,6
Water flow (1)	l/h	3143	3060	2579	3486	3411	2806	3980	3886	3145
Water pressur drop (1)	kPa	20	19	14	18	17	12	29	28	19
Sound power level (2)	dB(A)	76	76	69	76	76	69	77	77	70
Power input	W	320	315	175	340	330	180	345	340	182

(1) Water temperature 85/75 °C, air temperature 15 °C
(2) Sound power measured according to standards ISO 3741 and ISO 3742



Rated technical data

AREO P		42	42	42	43	43	43	44	44	44
Power supply	V-ph-Hz	230-1-50	400-3-50	400-3-50	230-1-50	400-3-50	400-3-50	230-1-50	400-3-50	400-3-50
Speed rotor	n ° pole	4	4	6	4	4	6	4	4	6
Motor connections	-	Mono	Delta	Star	Mono	Delta	Star	Mono	Delta	Star
Air flow	m^3/h	6900	7100	5600	6400	6550	5300	6200	6400	5150
Heating capacity (1)	kW	53,4	54,3	47,4	59,6	60,4	53,2	66,8	68,1	59,5
Water flow (1)	l/h	4718	4793	4185	5259	5329	4695	5894	6009	5250
Water pressur drop (1)	kPa	37	38	30	36	37	30	23	24	19
Sound power level (2)	dB(A)	75	73	67	74	74	68	75	75	69
Power input	W	623	650	450	635	690	465	655	700	470

AREO P		52	52	52	53	53	53	54	54	54
Power supply	V-ph-Hz	230-1-50	400-3-50	400-3-50	230-1-50	400-3-50	400-3-50	230-1-50	400-3-50	400-3-50
Speed rotor	n ° pole	6	4	6	6	4	6	6	4	6
Motor connections	-	Mono	Delta	Star	Mono	Delta	Star	Mono	Delta	Star
Air flow	m^3/h	6400	8200	6800	6200	7900	6450	5900	7600	6200
Heating capacity (1)	kW	48,6	55,9	50,3	60,8	70,2	62,3	66,3	77,4	68,3
Water flow (1)	l/h	4294	4934	4445	5373	6202	5497	5852	6834	6033
Water pressur drop (1)	kPa	17	22	18	19	25	20	21	27	22
Sound power level (2)	dB(A)	69	75	71	69	76	72	71	77	73
Power input	W	370	725	760	374	732	775	380	755	780

AREO P		62	62	62	63	63	63	64	64	64
Power supply	V-ph-Hz	230-1-50	400-3-50	400-3-50	230-1-50	400-3-50	400-3-50	230-1-50	400-3-50	400-3-50
Speed rotor	n ° pole	6	6	8	6	6	8	6	6	8
Motor connections	-	Mono	Delta	Star	Mono	Delta	Star	Mono	Delta	Star
Air flow	m^3/h	8600	8900	7100	7695	8300	6500	7500	7650	6000
Heating capacity (1)	kW	85,7	87,5	76,2	79,3	101,3	86,4	99,6	100,9	85,8
Water flow (1)	l/h	7567	7722	6731	7002	8943	7626	8795	8913	7571
Water pressur drop (1)	kPa	21	22	17	18	30	23	29	29	22
Sound power level (2)	dB(A)	70	71	66	69	72	67	71	72	67
Power input	W	555	565	360	560	575	380	582	590	390

(1) Water temperature 85/75 °C, air temperature 15 °C
(2) Sound power measured according to standards ISO 3741 and ISO 3742

Rated technical data

AREO H		13	13	23	23	33	33	33
Power supply	V-ph-Hz	230-1-50	230-1-50	230-1-50	230-1-50	230-1-50	400-3-50	400-3-50
Speed rotor	n ° pole	4	6	4	6	4	4	6
Motor connections	-	Mono	Mono	Mono	Mono	Mono	Delta	Star
Air flow	m^3/h	1083	855	2499	1758	3943	3800	2755
Heating capacity (1)	kW	10,3	8,89	21,3	17,3	22,2	32,5	26,9
Water flow (1)	l/h	905	785	1882	1529	1949	2871	2376
Water pressur drop (1)	kPa	13	10	19	13	6	11	8
Sound power level (2)	dB(A)	64	59	76	65	74	76	69
Power input	W	69	50	210	114	340	330	180

AREO H		43	43	43	53	53	53	63	63	63
Power supply	V-ph-Hz	230-1-50	400-3-50	400-3-50	230-1-50	400-3-50	400-3-50	230-1-50	400-3-50	400-3-50
Speed rotor	n ° pole	4	4	6	6	4	6	6	6	8
Motor connections	-	Mono	Delta	Star	Mono	Delta	Star	Mono	Delta	Star
Air flow	m^3/h	6080	6223	5035	5890	7505	6128	8100	7885	6175
Heating capacity (1)	kW	50,4	51,1	45,2	56,2	64,8	57,5	99,7	80,5	69,3
Water flow (1)	l/h	4454	4512	3991	4960	5720	5079	8802	7106	6112
Water pressur drop (1)	kPa	25	25	20	16	20	16	29	19	15
Sound power level (2)	dB(A)	75	77	70	69	76	72	70	71	66
Power input	W	635	690	465	375	732	775	560	575	380

(1) Water temperature 85/75 °C, air temperature 15 °C
(2) Sound power measured according to standards ISO 3741 and ISO 3742



Dimensional drawings

AREO P - L

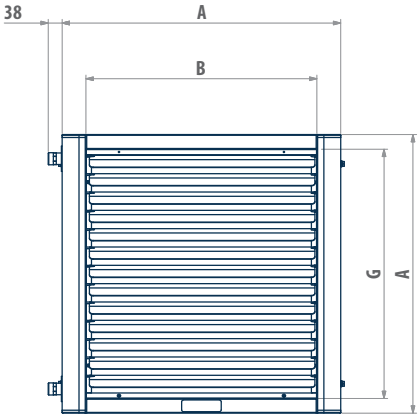

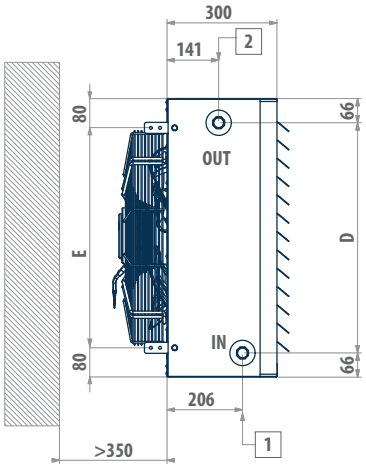

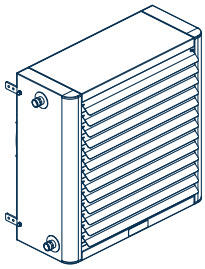

AREO H - S

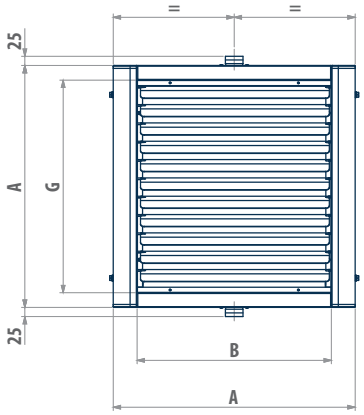

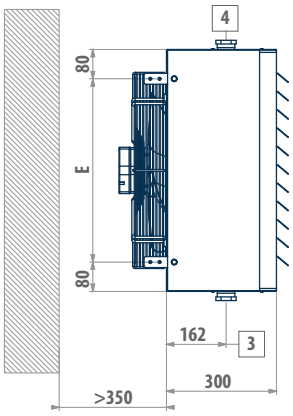

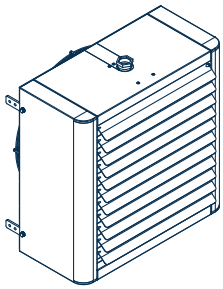

AREO P - L LEGEND

1	Water inlet connection, male gas
2	Water outlet connection, male gas

AREO H - S LEGEND

3	Water inlet connection, female gas
4	Water outlet connection, female gas

AREO P - L	A	B	D	E	G	1	2
12 - 13 - 14	460	330	300	380	380	3 / 4"	3 / 4"
22 - 23 - 24	560	430	400	480	480	3 / 4"	3 / 4"
32 - 33 - 34	660	530	500	580	580	1"	1"
42 - 43 - 44	760	630	600	680	680	1"	1"
52 - 53 - 54	860	730	700	780	780	1" 1 / 4	1" 1 / 4
62 - 63 - 64	960	830	800	880	880	1" 1 / 4	1" 1 / 4

AREO H	AREO S	A	B	E	G	3	4
13	12	460	330	300	380	3 / 4"	3 / 4"
23	22	560	430	400	480	3 / 4"	3 / 4"
33	32	660	530	500	580	1"	1"
43	42	760	630	600	680	1"	1"
53	52	860	730	700	780	1" 1 / 4	1" 1 / 4
63	62	960	830	800	880	1" 1 / 4	1" 1 / 4

Air conditioning fan heaters with BLDC motor

AREO i 14 - 118 kW



Brushless motor | Vertical installation | 2-pipe system | Heating | Cooling

Reliability and energy efficiency at the top of its category

The new AREOi series combines the reliability and sturdiness of the on/off version with the innovation of EBM-PAPST GreenTech® technology. The AREOi series is equipped with brushless inverters (BLDC) integrated with the motor, which guarantees accurate adjustment of the rotation speed and maximum adaptability to real-time thermal load.
Innovative GreenTech® technology makes it possible to achieve an exceptional degree of aeraulic efficiency and a consequent reduction in seasonal power consumption of up to 50% in comparison to the traditional version with AC motor.
The rounded shape of the cabinet gives the product an especially unique design.
The AREOi range consists of 18 models to be wall mounted. AREOi is ideal for both heating and cooling due to an innovative system for collecting condensate and additional insulation inside the cabinet.
The range includes 6 different construction sizes that are also available with 4-row heat exchangers to allow proper operation with hot water produced by the heat pump.

PLUS

- Low noise levels
- Wide operating range (up to 70 °C intake air)
- Axial fan with blades with an aerodynamic profile (HyBlade® technology)
- Electric motor, class F, approved for continuous operation
- Fan and motor are integrated to provide considerably increased reliability



ACCESSORIES

CONTROL PANELS	
MCLE	MYCOMFORT LARGE electronic controller with display
DIST	MYCOMFORT controller spacer for wall mounting
MCSWE	Water sensor for microprocessor controllers
CSD	Wall-mounted potentiometer for opening and closing the PAE MM motor driven louver
MOUNTING BOARDS	
DFP	Wall mounting board
DFC	Column mounting board
DFO	Adjustable wall/column mounting board
PROTECTIVE GRILLE	
R	Protective grille

DIFFUSERS	
DO	Two-row fin diffuser
LA	Air curtain diffuser
EXTERNAL AIR INTAKE	
PAE	External air intake
PAEM	Manual mixing louver
PAEMM	Motor driven mixer louver, modulating motor, power supply 24V, spring return
EXTERNAL AIR INTAKE RAIN PROTECTION GRILLE	
GR	External air intake rain protection grille



MAIN COMPONENTS

Fan drive assembly

The electric fan and BLDC motor are a single integrated unit optimized to achieve maximum aeraulic efficiency. In fact, conformity to ERP2015 is guaranteed, even for the versions with single-phase power supply.

Electric motor

Tropicalized motor directly coupled to an external rotor, standard, with the following features:
- equipped with internal thermal protection
- windings in class F
- protection rating IP54
- maintenance-free ball bearings

Axial fan

With blades with an optimized aerodynamic profile (HyBlade® technology), statically balanced, inserted in a housing that enhances aeraulic performance and minimizes noise.



Microprocessor controller

The advanced microprocessor control unit adjusts the fan speed of the brushless motor between 0 and 100%, so that in all partial load conditions the indoor unit will operate at a reduced speed with considerably reduced noise emissions and power consumption.



Cabinet

Pre-painted steel sheet cabinet complete with ABS corner trims, adjustable aluminium louvers (spring-operated) placed on the air outlet which enable an optimal distribution of air within the room to be heated.

Heat exchanger

High conductivity heat exchanger made with copper piping and aluminium fins assuring higher heat exchange than standard iron piping exchangers.

Dimensional drawings

AREO i

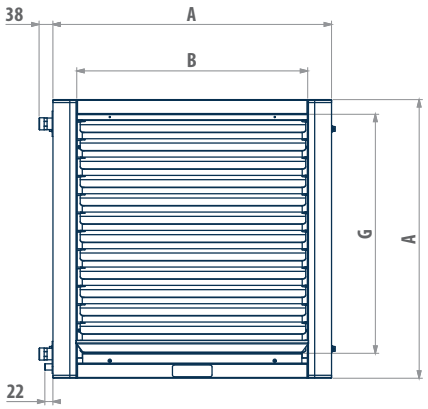

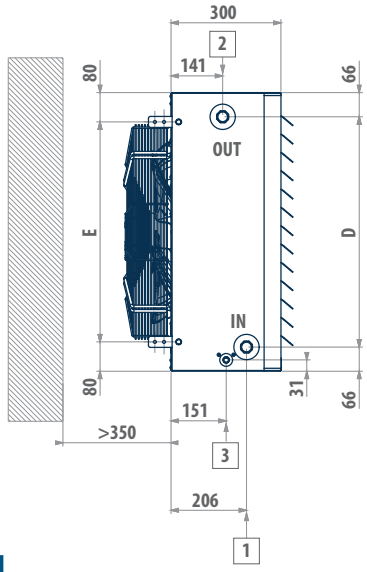

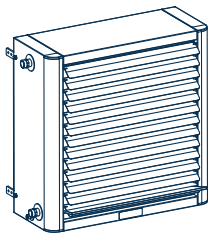

AREO i	A	B	D	E	G	1	2
12 - 13 - 14	460	330	300	380	380	3 / 4"	3 / 4"
22 - 23 - 24	560	430	400	480	480	3 / 4"	3 / 4"
32 - 33 - 34	660	530	500	580	580	1"	1"
42 - 43 - 44	760	630	600	680	680	1"	1"
52 - 53 - 54	860	730	700	780	780	1" 1 / 4	1" 1 / 4
62 - 63 - 64	960	830	800	880	880	1" 1 / 4	1" 1 / 4

AREO i LEGEND

1	Water inlet connection, male gas
2	Water outlet connection, male gas
3	Drain outlet, Ø 17 mm

Rated technical data

AREO i		12	13	14	22	23	24	32	33	34
Power supply	V-ph-Hz	230-1-50	230-1-50	230-1-50	230-1-50	230-1-50	230-1-50	230-1-50	230-1-50	230-1-50
Speed rotor	% del max	100	100	100	100	100	100	100	100	100
Air flow	m^3/h	1626	1375	1250	2700	2350	2300	3100	2850	2770
Heating capacity (1)	kW	11,2	14,0	16,0	18,7	23,9	26,8	28,7	31,5	35,4
Water flow (1)	kPa	37	27	21	21	26	17	13	12	19
Sound power level (2)	dB(A)	68	69	70	71	69	69	64	64	64
Power input	W	80	79	81	139	132	146	105	108	108

AREO i		42	42	43	43	44	44
Power supply	V-ph-Hz	230-1-50	400-3-50	230-1-50	400-3-50	230-1-50	400-3-50
Speed rotor	% del max	100	100	100	100	100	100
Air flow	m^3/h	5800	8200	5400	7800	5350	7749
Heating capacity (1)	kW	48,5	59,0	53,9	67,0	61,0	76,6
Water flow (1)	kPa	31	44	30	44	20	30
Sound power level (2)	dB(A)	71	81	72	81	72	82
Power input	W	318	844	334	840	344	850

AREO i		52	52	53	53	54	54
Power supply	V-ph-Hz	230-1-50	400-3-50	230-1-50	400-3-50	230-1-50	400-3-50
Speed rotor	% del max	100	100	100	100	100	100
Air flow	m^3/h	8800	9500	8450	9150	8100	8850
Heating capacity (1)	kW	58,2	60,7	73,2	76,6	80,6	85,0
Water flow (1)	kPa	24	25	27	29	29	32
Sound power level (2)	dB(A)	80	80	82	80	82	81
Power input	W	715	859	766	876	776	875

AREO i		62	62	63	63	64	64
Power supply	V-ph-Hz	230-1-50	400-3-50	230-1-50	400-3-50	230-1-50	400-3-50
Speed rotor	% del max	100	100	100	100	100	100
Air flow	m^3/h	7200	11200	6700	10500	6200	9750
Heating capacity (1)	kW	77,0	100,4	88,2	118	87,8	118
Water flow (1)	kPa	18	28	24	39	23	39
Sound power level (2)	dB(A)	69	78	70	79	71	79
Power input	W	248	845	259	864	266	875

(1) Water temperature 85/75 °C, air temperature 15 °C
(2) Sound power measured according to standards ISO 3741 and ISO 3742



Rated technical data

AREO i		12	13	14	22	23	24	32	33	34
Power supply	V-ph-Hz	230-1-50	230-1-50	230-1-50	230-1-50	230-1-50	230-1-50	230-1-50	230-1-50	230-1-50
Speed rotor	% del max	45	45	45	45	45	45	45	45	45
Air flow	m^3/h	779	723	705	1221	1398	844	1307	1284	1318
Heating capacity (1)	kW	7,34	9,31	10,9	11,8	17,3	13,6	16,8	18,7	21,3
Water pressur drop (1)	kPa	18	13	10	9	15	5	5	5	8
Total cooling capacity (2)	kW	2,10	2,66	3,10	2,96	4,97	3,41	3,25	4,01	6,15
Sensible cooling capacity (2)	kW	1,66	2,09	2,42	2,54	3,89	2,85	3,25	3,71	4,74
Water pressur drop (2)	kPa	9	6	5	4	7	2	1	1	4
Sound power level (3)	dB(A)	44	45	45	53	56	51	46	46	46
Power input	W	32	32	32	14	25	14	11	11	11

AREO i		42	42	43	43	44	44
Power supply	V-ph-Hz	230-1-50	400-3-50	230-1-50	400-3-50	230-1-50	400-3-50
Speed rotor	% del max	45	45	45	45	45	45
Air flow	m^3/h	1429	3399	1542	3278	1208	3282
Heating capacity (1)	kW	20,2	35,3	23,8	39,5	21,8	44,5
Water pressur drop (1)	kPa	7	4	7	4	3	3,5
Total cooling capacity (2)	kW	4,88	9,77	6,58	11,77	5,61	12,7
Sensible cooling capacity (2)	kW	4,20	7,88	5,21	9,03	4,57	9,93
Water pressur drop (2)	kPa	2	8	3	9	1	6
Sound power level (3)	dB(A)	53	64	55	64	55	63
Power input	W	31	69	32	73	32	76

AREO i		52	52	53	53	54	54
Power supply	V-ph-Hz	230-1-50	400-3-50	230-1-50	400-3-50	230-1-50	400-3-50
Speed rotor	% del max	45	45	45	45	45	45
Air flow	m^3/h	3884	4088	3708	3870	3444	3958
Heating capacity (1)	kW	36,5	37,6	44,3	45,6	46,9	51,4
Water pressur drop (1)	kPa	10	5	11	4	11	4
Total cooling capacity (2)	kW	9,3	9,68	12,5	12,9	14,1	15,6
Sensible cooling capacity (2)	kW	7,89	8,17	9,88	10,2	10,7	11,8
Water pressur drop (2)	kPa	4	4	5	6	6	7
Sound power level (3)	dB(A)	61	61	62	62	62	63
Power input	W	49	65	54	68	53	71

AREO i		62	62	63	63	64	64
Power supply	V-ph-Hz	230-1-50	400-3-50	230-1-50	400-3-50	230-1-50	400-3-50
Speed rotor	% del max	45	45	45	45	45	45
Air flow	m^3/h	3606	4890	2812	4438	2748	4431
Heating capacity (1)	kW	49,4	60,3	48,1	66,7	49,0	69,5
Water pressur drop (1)	kPa	8	5	8	5	8	5
Total cooling capacity (2)	kW	10,6	14,6	13,3	19,6	14,7	21,7
Sensible cooling capacity (2)	kW	9,89	12,7	10,5	15,1	11,1	16,1
Water pressur drop (2)	kPa	2	4	4	7	4	9
Sound power level (3)	dB(A)	50	56	49	56	49	58
Power input	W	26	83	29	84	30	89

(1) Water temperature 85/75 °C, air temperature 15 °C
(2) Water temperature 7/12°C, air temperature D.B. 27°C, W.B. 19°C (47% relative humidity)
(3) Sound power measured according to standards ISO 3741 and ISO 3742

Air destratifiers

DST 1700 - 9100 m³/h





Horizontal installation



Axial fan

The solution for eliminating hot air stratification in industrial environments

In industrial environments characterized by high ceilings and heating with hot air systems, the need to maintain a comfortable temperature at the floor level for the personnel results in the inconvenience of concentrating high-temperature air in the upper part of the area. Therefore, the heat remains trapped and unused near the roof and it is destined to be lost outdoors, thus increasing the building's heat loss.
The DST series air destratifiers eliminate this problem, generating a descending vertical air flow that is able to reduce the difference in temperature of the air between the floor and the ceiling up to a maximum of approximately 3 °C. During the summer months the DST air destratifiers can be used to achieve effective ventilation.
They are equipped with a fan drive unit consisting of axial fans and asynchronous, single-phase, and three-phase electric motors depending on the size, with external rotor, which guarantees compatibility with the most recent regulations on limiting energy consumption.
The safety thermostat and the magnetothermic motor protection device with manual reset, installed in the unit as standard equipment, together with the convenient mounting brackets and baffles that can be adjusted to direct the air flow, make installation particularly easy without the use of further accessories.

PLUS

- Simple installation
- Overload cut-out and safety thermostat are standard
- Adjustable louvers
- HyBlade® axial fans





MAIN COMPONENTS

Fan drive assembly

The axial fan, with HyBlade® type airfoil blades made of aluminum and coated with plastic material, possesses the unique characteristics of both materials: sturdiness and quietness are combined with a highly efficient asynchronous electric motor with external rotor.



Fan stop thermostat

It is installed on the unit and allows the temperature to be set at which destratifier operation is activated.

Structure

Pre-painted sheet steel structural work equipped with ABS and adjustable aluminum baffles.

Rated technical data

DST		14	26	36	46	56	66
Fan speed	rpm	1400	900	900	900	900	750
Air flow rate	m³/h	1710	3083	4199	7220	8142	9139
Minimum installation height	m	3	3,5	4,5	5	7	6,5
Maximum installation height	m	5	5,5	7	7,5	9	10
Power supply	V - ph - Hz	230-1-50	230-1-50	400-3-50	400-3-50	400-3-50	400-3-50
Power input	W	62	110	160	390	418	320
Absorbed current	A	0,3	0,5	0,3	0,7	0,7	0,6
Sound power level	dB(A)	65	68	72	76	78	70

Dimensional drawings

DST

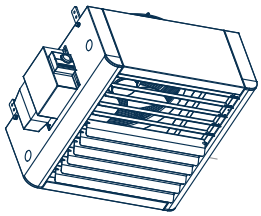

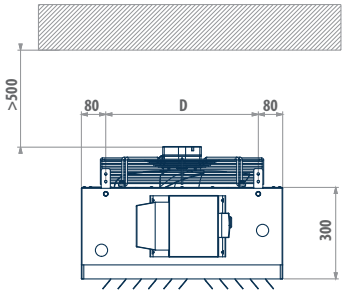

DST	A	B	C	D	E
14	460	300	350	300	500
26	560	400	450	400	500
36	660	500	550	500	525
46	760	600	650	600	515
56	860	700	750	700	535
66	960	800	850	800	535

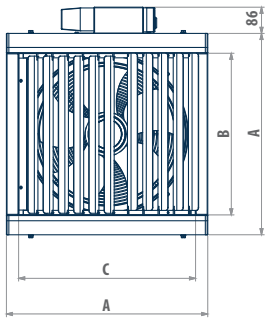

Galletti
AIR CONDITIONING



CONTROLLERS AND SOFTWARE FOR HYDRONIC INDOOR UNITS

Introduction	p. 132
MYCOMFORT	p. 134
EVO	p. 136
ERGO	p. 138
LED503	p. 140



GALLETTI CONTROLS



Air-conditioning control is now quick and easy: effective room comfort is efficiently, simply, and intuitively accessible with Galletti control panels, from the simplest electromechanical control for setting the fan speed to microprocessor controls for complete temperature and humidity control.
Both ON/OFF and modulating 2- and 3-way valves are managed according to the temperature and humidity values measured.
The integrated management of the controls is completed with ERGO, supervision software that allows the creation of sophisticated adjustment logics whose goals are to meet the required level of comfort and to achieve energy savings.

Controls that can be integrated into any type of system



The wide range of Galletti controllers offers a multitude of installation options.
No fewer than 7 controls designed for on-board installation guarantee simple and elegant solutions. Specific installation kits allow mounting in the ESTRO, FLAT, and 2X1 hydronic indoor units. This gives users control of the temperature at their fingertips and a solution that can be integrated in any type of environment.
There is now an even wider range of wall-mounted controllers: 9 controls with the option to manage, from a single point, more than one indoor unit in the same room.
In addition to these, an infrared remote control is also available for high wall-mounted indoor units and cassette fan coil units.

Controls of every level for any need

Galletti's offering is suitable for every need of cost-effectiveness and functionality. With its 9 electromechanical controls and its 5 microprocessor controls, Galletti is a market leader due to the diversity of its range of products. The devices offered in its catalogue are capable of interacting with multiple-speed indoor units or with modulating ventilation managing various different dynamics of thermostatation and any serial communication.



Overview page of controls for hydronic indoor units

The following table can be used to quickly identify the most suitable control panel according to the functionality required.

		MICROPROCESSOR CONTROLLERS					ELECTROMECHANICAL CONTROLLERS									
		MYCOMFORT BASE	MYCOMFORT MEDIUM	MYCOMFORT LARGE	EVO	LED503	CB	CD	CDE	TB	TD	TIB	TDC	TD4T	TA	TA2
Installation	On-board	✔	✔	✔	–	✔	✔	–	–	✔	–	✔	–	–	–	–
	Wall	✔	✔	✔	✔	✔	–	✔	✔	–	✔	–	✔	✔	✔	✔
System	2 pipes	✔	✔	✔	✔	✔	✔	✔	✔	✔	✔	✔	✔	✔	✔	✔
	4 pipes	✔	✔	✔	✔	✔*	–	–	–	–	–	–	–	✔	–	–
Adjustment	Air thermostat	✔	✔	✔	✔	✔	–	–	–	✔	✔	✔	✔	✔	✔	✔
	3 speeds	✔	✔	✔	✔	✔	✔	✔	✔	✔	✔	✔	✔	✔	–	–
	4 speeds	✔	✔	✔	✔	✔*	–	–	–	–	–	–	–	–	–	–
	Automatic speeds	✔	✔	✔	✔	✔	–	–	–	–	–	–	–	–	–	–
	Variable speed	–	–	✔	✔	–	–	–	–	–	–	–	–	–	–	–
	Dehumidification / RH reading	–	✔	✔	✔	–	–	–	–	–	–	–	–	–	–	–
External sensors	Water sensor	✔	✔	✔	✔	✔	–	–	–	–	–	–	–	–	–	–
	Remote air sensor	✔	✔	✔	✔	✔	–	–	–	–	–	–	–	–	–	–
	Remote RH sensor	–	✔	✔	✔	–	–	–	–	–	–	–	–	–	–	–
	Water operating thermostat	–	–	–	–	–	✔	✔	✔	✔*	✔*	✔*	✔*	–	✔	–
External devices management	ON/OFF valve management	✔	✔	✔	✔	✔	–	–	–	✔*	–	✔*	–	✔	✔	✔
	Modulating valve management	–	–	✔	✔	–	–	–	–	–	–	–	–	–	–	–
	Control of heating element	✔	✔	✔	✔	✔*	–	–	–	–	–	–	–	–	–	–
	Digital outputs	–	–	✔	✔	–	–	–	–	–	–	–	–	–	–	–
Ancillary functions	Summer/Winter local	✔	✔	✔	✔	✔	–	–	–	–	✔	✔	–	✔	–	✔
	Summer/Winter water	✔	✔	✔	✔	✔	–	–	–	–	–	–	–	–	–	–
	Summer/Winter air (4 pipes)	✔	✔	✔	✔	✔	–	–	–	–	–	–	–	–	–	–
	Economy	✔	✔	✔	✔	–	–	–	–	–	–	–	–	–	–	–
	Digital inputs	✔	✔	✔	✔	✔	–	–	–	–	–	–	–	–	–	–
	Modbus communication	–	✔	✔	✔	–	–	–	–	–	–	–	–	–	–	–

✔* options that are not mutually compatible

Electronic microprocessor controller with LCD display

MYCOMFORT





ERGO Supervision | BUS communi-cation | External devices management

Three different proposals for a customized level of comfort

Climate control becomes fast and simple: interior comfort conditions can be controlled thanks to the new MYCOMFORT control panels, the connection node of Galletti integrated systems.
The microprocessor control panel allows you to set the operating mode of the indoor hydronic units in such a way as to achieve conditions of interior comfort and complete control over the air conditioning system.
The controller features a large-sized liquid crystal display with incorporated keypad for setting and reading environmental parameters and the operating parameters of the indoor unit connected to it.
There is a vast choice of accessories available, which allow either wall mounting or installation on board the indoor unit.

PLUS

- Three versions depending on the customer's requirements
- Large display
- User-friendly interface
- Wall mounted or on-board installation
- Easy connection and startup



AVAILABLE VERSIONS

BASE
Temperature-based control of fan coil (4 fan speeds) unit and regulating valves.

MEDIUM
Control of fan coil unit (4 fan speeds) and valves based on temperature and humidity, connection to ERGO systems, setting up of small networks in slave mode.

LARGE
Control of fan coil unit (4 fan speeds) and regulating valves based on temperature, humidity, weekly timer, connection to ERGO systems, setting up of small networks in master mode, backlit display, control of modulating devices (valves, BLDC motors).



COMPONENTS

Shell

The outer shell is made of ABS that has been UV treated to retain the original colour over time. Its pleasant design makes it suitable for high-grade installations in sophisticated environments.



Display

3" are available to the user to clearly view all the data of interest for efficient adjustment. The use of intuitive pictograms to represent all the functions makes it highly user friendly.



Terminal board

MYCOMFORT features quick-connect terminals which enable hassle-free wiring. Programming of the functions and address is simplified as it can be done directly from the keypad and display.



FUNCTIONS

Control and savings

Automatic control of the unit's cooling and heating functions according to air and water temperatures.

Real comfort

MYCOMFORT can control and maintain comfort in terms of both temperature and humidity thanks to the presence of a sensor which measures ambient humidity and enables dehumidification cycles to be carried out by acting on valves, ventilation and the water set-point.

Management of accessories and external devices

This controller allows the management of both ON/OFF and modulating 2- and 3-way valves, and in addition it is possible to manage external devices such as chillers, boilers, and zone valves. It is performed by means of no-voltage ON/OFF contacts, depending on the environmental parameters.

Supervision

This controller can be integrated with the ERGO software monitoring system, by means of the RS485 bus connection, from which it is possible to display all the functions and access to the MYCOMFORT programming menu.

MYCOMFORT Functions

	Base	Medium	Large
4-speed fan control	✔	✔	✔
ON/OFF valve control	✔	✔	✔
ON/OFF via external enable signals / digital inputs	✔	✔	✔
External devices/digital outputs ON/OFF			✔
Air temperature sensor	✔	✔	✔
Water temperature sensor	✔	✔	✔
Air humidity sensor		✔	✔
BUS/RS485 connection		✔	✔
Modulating valves/0-10V outputs control			✔
Inverter fans/0-10V outputs control			✔
Weekly clock			✔
Backlit display			✔

ACCESSORIES

KB2X1E	2X1 on-board installation kit
KBESTE	ESTRO on-board installation kit
KBFLAE	FLAT on-board installation kit
DIST	MYCOMFORT controller spacer for wall mounting
MCSWE	Water sensor for BASE, MEDIUM and LARGE versions
MCSUE	Remote humidity sensor for MEDIUM and LARGE versions

Electronic microprocessor controller with remote user interface

EVO





ERGO Supervision | BUS communication | External devices management

Intuitive and user-friendly multi-purpose regulator

EVO encompasses the best of Galletti adjustment with regard to hydronic indoor units.
The EVO software, which was developed entirely by Galletti's Technical Department, consists of two distinct parts in two microprocessors. The first of these, resident on the power board, manages the monitoring of the parameters and the adjustment logics. The second part of the software, which is loaded on the user interface microprocessor, guarantees true communication, by means of which the installer and the user are guided in the configuration and use of the controller.
If on-board installation of the power board is requested, which is an option that is available for the majority of Galletti hydronic indoor units, during the wiring phase you just need to connect the user interface using a two-core shielded cable. This extraordinary simplicity cuts installation time and costs in half.
The EVO controller has been designed to govern the operation of Galletti indoor units with single-phase multispeed asynchronous motor or modulating speed BLDC motors. Specifically, its advanced technology makes it possible to establish control networks that are suited to meet any need, for automatic and intelligent management of the system's indoor units.

PLUS

- ✔ Considerable savings in the installation phase
- ✔ User-friendly interface
- ✔ RS485 and OC serial communication
- ✔ Advanced de-humidifying function
- ✔ Simultaneous control of 3 modulating devices
- ✔ Advanced control of time schedules



ACCESSORIES

EYMCSWE	NTC air and water sensor
EYMCSUE	Humidity sensor
UYIPM	Power interface for currents greater than 5 A



FUNCTIONS

Automatic control of time slots

The user interface makes it possible to set the ON/OFF status of the control and the desired setpoint, on an hourly basis, for the different days of the week. If the above-mentioned operating parameters are set on a master unit, they can be replicated on all the connected slaves.



Modulating devices control

EVO is capable of simultaneously controlling up to two modulating valves and one BLDC fan, making it possible to vary the air flow rate and the water flow rate in the heat exchanger, adapting to the thermal load.

Humidity control

EVO offers the possibility of automatically activating a dehumidification process depending on the relative humidity and a settable setpoint. This function requires a humidity sensor that is available as an accessory.

Serial Communication

The controller has serial ports for RS485 communication and power-line communication that allow the development of control networks that are adequate for every need.

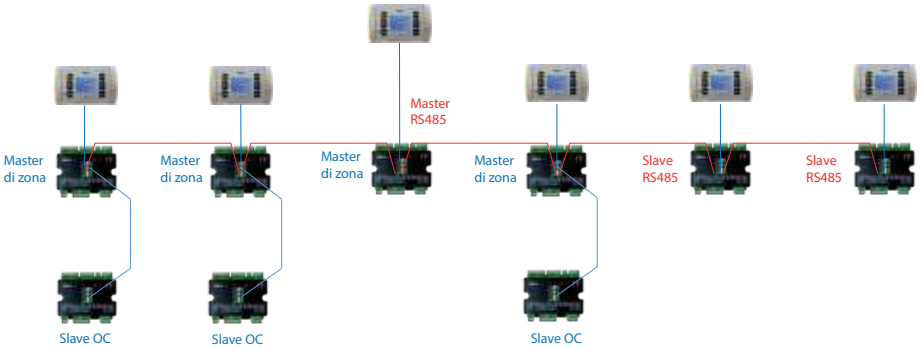

CONNECTIVITY

By combining digital outputs and inputs present on EVO, it is possible to develop synergetic solutions with other system components.



Remote activation of heat recovery units

The heat recovery units are essential for maintaining good ventilation in the rooms, especially during periods with high occupancy. With EVO it is possible to set a series of weekly time slots that take into account the effective occupancy of the rooms. The activation of indoor units in those zones will be managed concurrently with the activation of the heat recovery units. This makes it possible to combine good air quality, temperature and humidity comfort, and considerable energy savings by deactivating all the systems when they are not necessary.

"Economy"

A typical need in hotel rooms and in other rooms with variable occupancy is the management of air conditioning with reduced operation when the user is not present. This solution, which is often accomplished by means of occupancy sensors or magnetic readers, guarantees considerable energy savings, but requires the possibility to force the fan coil unit to operate in Economy mode in a simple and effective manner. This is all possible with EVO, which has 3 pre-configured digital inputs for ON/OFF, Economy mode, and remote summer/winter switchover.



Centralized adjustment of hydronic indoor units and radiant panels

EVO integrates perfectly with hybrid systems that include fan coil units and radiant systems. Retaining the typical adjustment dynamics of a fan coil system or operating in the innovative dehumidification mode, EVO is able to concurrently control the ON/OFF solenoid valves for the thermostatic adjustment of the radiant panels.

Activation of external dehumidifier / humidifier

This control implements the humidity control function in relation to a settable setpoint. By connecting the appropriate sensor to the control it is possible to not only vary the fan coil unit's adjustment dynamics, but also manage the calls to external devices such as humidifiers and dehumidifiers.

Supervision software for air conditioning systems

ERGO





External devices management | Time schedules | Zone Management | BUS communication

Complete and automatic control of the air conditioning system

Efficiency and comfort require a careful check of every single part of the system, enhancing its capacities and managing it according to the user's needs.
It is now no longer necessary to worry about comfort and energy savings: ERGO takes care of everything.
ERGO can be installed on any control panel with Windows operating system and interfaces with Galletti hydronic indoor units and heat pumps, with generation system operators like EVO SYSTEM, and with external devices, circulators, and valves.
The Ergo solution, a result of Galletti's long-time experience in HVAC technologies, was created in response to the need to control heating and air conditioning systems in a simple manner with a view to saving energy.
ERGO is intended specifically for hotels, administrative centers, offices, and apartment buildings and offers a control strategy that adapts the chiller and indoor units' operation to the actual thermal load requirements, guaranteeing:

- energy savings in the production of chilled water
- simple, economical installation
- a reduction in operating costs
- user-friendly operation
- advanced system monitoring capabilities
- centralised control over the system

PLUS

- ✔ Automatic correction of operating parameters
- ✔ Time schedules
- ✔ Zone Management
- ✔ Selection of the degree of autonomy offered to the individual user
- ✔ Management of external devices



ACCESSORIES

VM11000203	USB-RS485 Converter	**EYEVOBOARD**	Circuit board for EVO controller
VM11000204	TCP/IP - RS485 Converter	**EYEVODISP**	User interface for EVO controller
VM11000205	RS485 repeater	**EYMCSWE**	Microprocessor controllers water sensor
EYMCME	Microprocessor controller Medium version	**EYMCSUE**	Microprocessor controllers water sensor
EYMCLE	Microprocessor controller Large version	**EYIOEXP**	Remote power interface



FUNCTIONS

Comfort index

The software analyses the operating conditions of indoor units on a real-time basis in order to determine the actual instantaneous thermal load of each user, an essential prerequisite for implementing an adjustment strategy that minimises operating costs while enabling the system to work in the best possible conditions.

Self-adaptive function

The adaptive function adjusts the heat pump's setpoint according to the effective power required in the various zones to be air conditioned. This guarantees a more accurate adjustment and an increase in the heat pump's efficiency, which can reach up to 20%.

Management of external devices

This software allows the automatic or manual management of external devices such as circulators, pumps and zone valves, and heat recovery units. Its activation and deactivation could be, for example, linked to seasonality or associated with the time slots of a specific zone.

Automatic adjustment

The individual zones' setpoint changes automatically on an hourly basis depending on the settings. In the configuration phase the heating requirements in the different seasons are evaluated, thereby achieving automatic and intelligent management without any additional actions by the user.

Time schedules management

The system turns on and off the indoor units in the various zones depending on actual need and the presence of people. This makes it possible to considerably reduce consumption and eliminate in the room the possibility of human error in managing the air conditioning.



Operational data acquisition

ERGO allows the storage of large amounts of operational data collected by individual indoor units or averaged for the zones of interest. This provides an essential tool for system operators and maintenance providers that is able to highlight criticalities and possible optimization of the system.

Degree of autonomy

This monitor allows you to choose between 4 different levels of remote control, thereby defining, according to requirements, what modification options to offer the user.



CONNECTIVITY

The ERGO system places a large number of indoor units in communication with each other and offers the user the option of overall control from a single location with minimum effort.

ERGO operates by means of communication with Modbus protocol on RS485 network.
The system is capable of managing up to 240 indoor units controlled by MYCOMFORT and EVO and supports "mixed" networks with both types of controllers.
Within the system up to 3 heat pumps can be managed, linking their operation to that of the hydronic indoor units.
Galletti offers modular solutions that are adequate for every need. The converters offered allow the RS485 BUS to be connected directly to the computer or to establish up to 8 communication branches from a single Ethernet backbone.

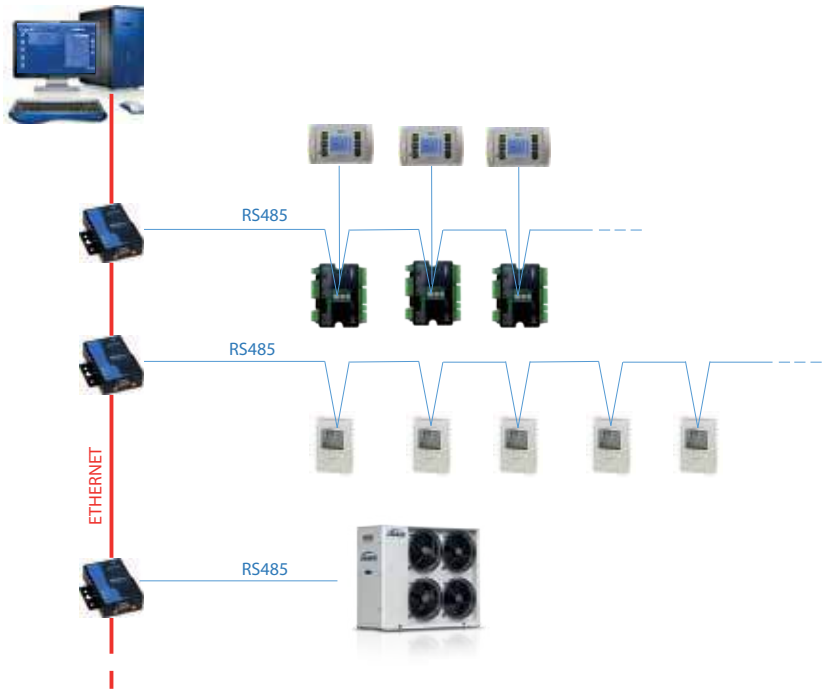

Recess wall-mounted control panel

LED503





Remote management | 2-pipe system | 4-pipe system

PLUS

- Complete management of indoor units for 2- or 4-pipe systems
- Intuitive use
- Large LED display for ease of visualization
- Can be installed in a 503 socket box



Simplicity and elegance for the management of water system indoor units

The proposed microprocessor control panels for Galletti indoor units is completed by the LED503 command with LED display that is designed for recess wall mounting or mounting on the Estro series fan coils. LED503 includes an advanced software program developed internally by Galletti's R&D department focusing on ease of use and simplicity of installation and programming.
LED503 makes it possible to control up to 4 fan speeds, automatically or manually, together with the management of 2- or 3-way valves in 2- or 4-pipe air conditioning systems.
Due to the presence of a configurable digital input it can easily be remotely interfaced to centralize specific functions such as seasonal switchover of the operating mode, activation of the economy mode, or simply turning it on or off.
The proportional adjustment algorithm automatically adjusts the fan speed depending on the value of the difference between the ambient temperature and the set setpoint and allows precise adjustment of the room conditions.
The water sensor, which can be installed as an accessory, is used to verify that the temperature of the heat transfer fluid is always at an optimal level and compatible with the active operating mode.
The seasonal switchover can be made automatic depending on the air or water temperature, making this controller the perfect tool for applications in both the residential sector and the commercial or hotel sector.
LED503 can be easily integrated in the room to be air conditioned due to the option to choose between three different frames:
- plate, color black RAL9005
- plate, color gray RAL9003
- plate, color white RAL7031

Alternatively it is also possible to use commercial plates of the Idea and Rondò series in the Vimar catalogue.

ACCESSORIES

EYKL	On-board installation kit for ESTRO
EYCOB	Plate for LED503 - RAL9005 black
EYCOG	Plate for LED503 - RAL9003 grey
EYCOW	Plate for LED503 - RAL7031 white
UYIPM	Power interface for currents greater than 5 A
EYKP	Power interface for connecting up to 4 fan coils to one controller



Galletti
AIR CONDITIONING



AIR/WATER CHILLERS AND HEAT PUMPS

Introduction	p. 144
MPI DC	p. 146
MPE	p. 152
SCX	p. 164
LCX	p. 174
LSE	p. 196
MTE	p. 208
LER	p. 218
MCC	p. 228

Galletti
AIR CONDITIONING



AIR/WATER CHILLERS AND HEAT PUMPS

Range of capacities between 4 and 1200 kW to meet engineering and installation requirements.

8 different series of units, cooling only or heat pump, from which professionals can make the proper choice depending on their design and installation requirements.
The feature that all Galletti units have in common is the complete configurability of every model. The hydronic and aeraulic "plug & play" feature that allows immediate system application, the partial heat recovery from overheating for the production of hot water at the same time as operation in cooling mode, and the sophisticated controls that allow interconnection with monitoring systems using the most common protocols, are a few of the possibilities for customizing the air/water heat pumps and chillers. With Galletti, special becomes standard.



All-in-one solutions.

All Galletti air heat pumps and chillers are completely configurable on the hydronic side.
Inside every unit, from 4 to 1200 kW, depending on the series, it is possible to install hydronic kits without modifying their dimensions, with the option of choosing the water circulation pump:
- single pump, standard head or uprated (high head);
- dual pump solution (OR): standard or uprated pump, operating singly. The pumps operate in turns on a time/fault basis. In the case, the microprocessor controls the pumps in such a way as to equally divide the hours of operation, changing over the pumps in the event of a fault.
- dual pump solution (AND): standard or uprated pump, operating simultaneously. Connected in parallel, they deliver water at the nominal flow rate when operating simultaneously.

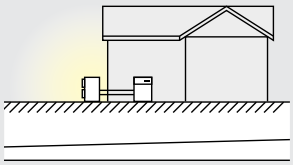

Aerothermal energy

Air: a source that is always available

Galletti air/water units are characterized by a large operating range that allows them to adapt to use under any conditions.
Cooling operation at full load with air temperatures up to 51 °C, which increases as a result of careful management of the step levels.
During the winter period, production of water up to 60 °C and operation with external temperatures as low as -15 °C.



Finned block heat exchangers

They are generously sized and can use hose with a diameter of 8 mm, which reduces air side pressure drops, thereby considerably improving the unit's noise levels.
The special engineering of the heat exchangers allows defrost cycles to be carried out at maximum speed in the models with heat pump operation, which brings clear benefits in terms of the integrated efficiency of the whole cycle.
On request hydrophilic heat exchangers can be installed that particalize the water droplets and reduce obstruction by ice of the spaces between the fins, preventing the formation of frost at low temperatures.
The finned block condensers can be fitted with a protective outer grille.

Free-cooling

The Free-cooling units permit high energy saving when outdoor temperature is lower than the circulating fluid temperature (process industry, close control applications, information technology industry in general, congress halls, etc.).
Free cooling circuit performance depends on the difference between outdoor air temperature and circulating water temperature.
Beside the above features, the free-cooling versions are provided with a 3-way valve that deviates the flow to the free cooling coils upstream from the condenser coils within the air flow system.
When outdoor air temperature falls below temperature of water returning from the system, heat exchange may occur, thus starting the free cooling unit with possible integration by one or more steps of mechanical cooling operation.

Outdoor packaged unit with BLDC compressor

MPI DC 8 - 29 kW





BLDC scroll compressor | BLDC rotary compressor | R-410A refrigerant | Cooling only | Cooling / Heating | Packaged unit | Axial fans

PLUS

- Twin-rotary or scroll compressor driven by an electronic control BLDC motor
- Electronically controlled electric expansion valve
- Modulating hydraulic pump with stainless steel impeller
- Incorporable inertial tank
- Access to the tax incentives provided for energy retrofitting

Large operating range and energy efficiency under every condition

The MPI DC series consists of 6 heat pump models and 5 cold only models and is intended mainly for residential or light commercial applications. Due to the control managed by a software program developed by Galletti, the MPI DC series' adjustment logic makes it possible to adjust the water delivery temperature to the set value and to control the compressor so that the power generated by the machine is adjusted to the thermal load required by the system. This represents a strategic feature in the limiting of energy consumption, because the effective thermal load of an air conditioning system is less than 60% of the nominal load most of the time.
The BLDC technology upon which is based the compressor's electric motor guarantees the ability to change the rotation speed in a frequency range between 30 and 120 Hz, thereby reducing at the same time the power consumption and thus maintaining a high level of efficiency in the operation at partial load and improved isentropic efficiency. These units' large operating range, which is also achieved due to the variable flow water circulator they are equipped with as a standard feature, guarantees operation with air temperatures from -15 °C up to 52 °C, while in heating mode it is possible to produce hot water up to 58 °C. This allows their use as a single generator in addition to summer air conditioning, even in medium-temperature heating systems and for the production of DHW. Furthermore, the innovative Smart Defrost System guarantees that defrosting always occurs in the most efficient manner even under the most extreme environmental conditions.

MPI DC can be the only heat generator in low-power systems due to its large operating range that includes both low winter temperatures and high summer temperatures.

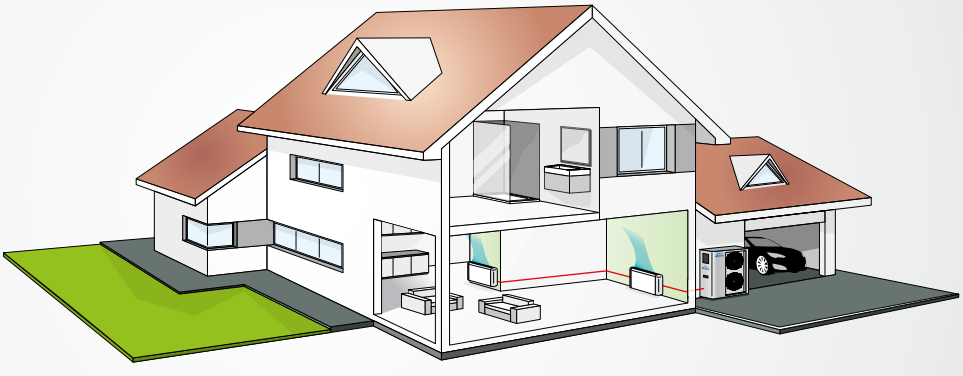



MAIN COMPONENTS

Structure

It is constructed of galvanized and painted sheet metal that is resistant to corrosive agents. Compressor compartment closed and accessible from three sides due to easily removable panels, available also with internal coating of soundproofing material.

Compressor

Hermetic twin-rotary or scroll compressor driven by a permanent magnet BLDC motor and controlled by a trapezoidal wave inverter. It is attached to the base by means of rubber dampers to reduce the transmission of vibrations.

Heat exchanger

Finned heat exchanger constructed with copper pipes mechanically attached to aluminum fins, carefully designed to minimize the defrosting phases and optimize heat exchange efficiency in every operating phase.

Electronically controlled electric expansion valve

Key component for the proper functioning of the unit. The PID control algorithm allows it to quickly adapt to all operating conditions and to keep the cooling cycle stable.

Hydraulic kit

Variable flow centrifugal circulator with stainless steel impeller. An expansion vessel and the automatic filling tap are also included.
An inertial buffer tank built into the structure is available as an optional accessory.

DHW kit

A system that makes it possible to transform the MPI DC heat pumps into multi-purpose units that are able not only to meet the requirements of the air conditioning system, but also to produce domestic hot water as a priority by means of the Galletti TP or TN series thermal storage tanks. It is comprised of a microprocessor control unit with LCD display and a 3-way motorized valve. Also, anti-Legionnaire's disease cycles can be activated by means of a heating element.



CONFIGURATION

The models are completely configurable by selecting the version and the options. To the right is shown an example of configuration.

Version	Fields ▶	1	2	3	4	5	6	7	8	9	10	11	12	13
MPIDC014H0AC		A	2	0	0	E	P	3	0	2	0	G	0	2

To verify the compatibility of the options, use the selection software or the price list.

AVAILABLE VERSIONS

Cooling only versions

MPIDC…CMAC	Water chiller 230V - 1 - 50 Hz
MPIDC…C0AC	Water chiller 400V - 3N - 50 Hz

Versions with reversible heat pump

MPIDC…HMAC	Air/water heat pump 230V - 1 - 50 Hz
MPIDC…H0AC	Air/water heat pump 400V - 3N - 50 Hz

CONFIGURATION OPTIONS

1 - EXPANSION VALVE
- **A** Electronic 230V

2 - PUMP USER SIDE AND ACCESSORIES
- **1** 1 Modulating standard pump, system side
- **2** 1 EC pump, system side

3 - BUFFER TANK
- **0** Absent
- **S** Present, system side

4 - DESUPERHEATER
- **0** Absent

5 - FANS
- **C** Standard with condensation control
- **E** BLDC with electronic control

6 - ANTIFREEZE KIT
- **0** Absent
- **E** Base (plate exchangers only)
- **P** Additional protection for 1 pump
- **S** Additional protection for 1 pump and tank

7 - SOUND INSULATION
- **0** Absent
- **1** Compressor compartment soundproofing
- **2** Compressor silencing housings
- **3** Opt 1 + Opt 2

8 - COOLING ACCESSORIES
- **0** None
- **M** Refrigerant pressure gauges

9 - REMOTE CONTROL / COMMUNICATION
- **0** Absent
- **2** RS485 (Carel / Modbus)
- **S** Simplified remote control
- **X** Advanced remote control (PCOXS)

10 -SPECIAL HEAT EXCHANGERS
- **0** Standard
- **R** Copper / copper
- **C** Cataphoresis
- **B** Fins pre-coated with epoxy paint
- **I** Hydrophilic

11 - CONDENSER PROTECTIVE GRILLE
- **0** Absent
- **G** Present

12 - COMPRESSOR OPTIONS
- **0** Absent
- **4** Exchanger heating cable (Heat Pump only)

13 - Microprocessor control
- **2** pCOXS controller

ACCESSORIES

- Base rubber vibration dumpers
- Base spring vibration dumpers
- Simplified remote control
- MYCHILLER BASE (RS485 is a mandatory accessory)
- MYCHILLER PLUS (RS485 is a mandatory accessory)

Rated technical data of water chillers

MPI DC - C		010 M	014	018	023	029
Power supply	V - ph - Hz	230-1-50	400-3N-50	400-3N-50	400-3N-50	400-3N-50
Cooling capacity (1) (E)	kW	10,5	14,2	18,0	22,8	28,9
Power input (1) (E)	kW	3,35	4,78	7,63	7,77	12,3
EER (1) (E)		3,07	2,9	2,31	2,88	2,31
ESEER (E)	kW	4,17	4,09	4,03	3,87	3,98
Eurovent efficiency class	kW	B	B	E	C	E
Water flow (1)	A	1826	2454	3132	3935	4992
Water pressure drop (1) (E)	A	23	30	47	27	42
Pump Available head (1)		142	162	132	130	84
Maximun current absorption	A	16	20	20	35	35
Startup current	A	10	10	10	10	10
No. of compressors / circuits	n°	1 / 1	1 / 1	1 / 1	1 / 1	1 / 1
Expansion vessel	dm^3	5	5	5	5	5
Buffer tank volume	dm^3	30	30	30	50	50
Sound power level (2) (E)	dB(A)	70	71	71	74	74
Transport weight	kg	210	210	210	285	285
Operating weight	kg	235	235	235	335	335

Rated technical data of heat pumps

MPI DC - H		008 M	010 M	014	018	023	029
Power supply	V-ph-Hz	230-1-50	230-1-50	400-3N-50	400-3N-50	400-3N-50	400-3N-50
Cooling capacity (1) (E)	kW	7,93	10,3	13,9	17,7	22,3	28,3
Power input (1) (E)	kW	2,65	3,42	4,89	7,81	7,90	12,5
EER (1) (E)		3,00	3,02	2,85	2,26	2,83	2,27
ESEER (E)		3,81	4,09	4,06	3,96	3,78	3,91
Eurovent Efficiency Class		B	B	C	F	C	F
Water flow (1)	l/h	1366	1783	2407	3067	3861	4903
Water pressure drop (1) (E)	kPa	5	22	29	44	26	40
Available head (1)	kPa	68	142	163	133	131	84
Heating capacity (2) (E)	kW	8,92	11,5	15,8	21,8	24,7	34,0
Power input (2) (E)	kW	2,84	3,64	5,08	7,70	8,02	12,0
COP (2) (E)		3,14	3,17	3,11	2,83	3,09	2,83
Eurovent Efficiency Class		B	B	B	C	B	C
Water flow (2)	l/h	1545	1974	2727	3752	4273	5853
Water pressure drop (2) (E)	kPa	7	23	31	55	29	51
Available head (2)	kPa	65	137	155	109	116	45
Maximun current absorption	A	16	16	20	20	35	35
Startup current	A	10	10	10	10	10	10
No. of compressors / circuits	n°	1 / 1	1 / 1	1 / 1	1 / 1	1 / 1	1 / 1
Expansion vessel	dm^3	1	5	5	5	5	5
Buffer tank volume	dm^3	20	30	30	30	50	50
Sound power level (3) (E)	dB(A)	68	70	71	71	74	74
Transport weight	kg	144	220	220	220	300	300
Operating weight	kg	153	240	240	240	347	347

(1) Water temperature 12/7 °C, outdoor air temperature 35 °C (UNI EN 14511:2011)
(2) Water temperature 40/45 °C, outdoor air temperature 7 °C D.B. - 6 °C W.B. (UNI EN 14511:2011)
(3) Sound power level measured according to UNI EN ISO 9614
(E) EUROVENT certified data

Dimensional drawings

MPI DC 008

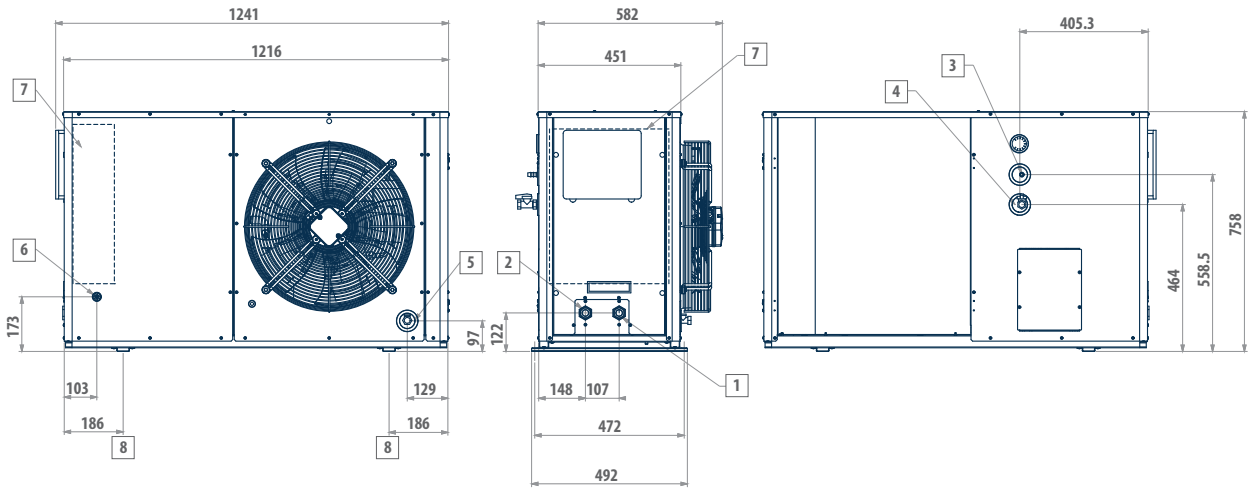

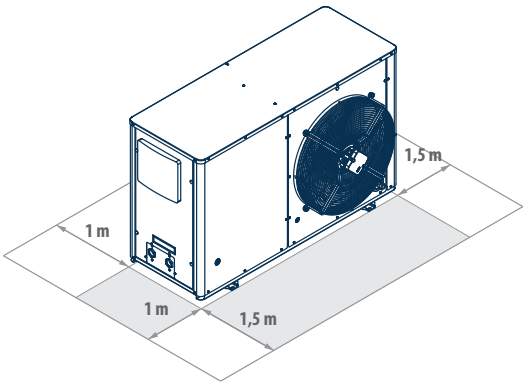

LEGEND	
1	Water inlet 1" female
2	Water outlet 1" female
3	Safety valve discharge outlet provided with rubber ring holder
4	Water supply ½" male (optional tap)
5	Water drainage ½" female
6	Power supply Ø 28 mm
7	Electric control board
8	Fastening points for vibration dampers (accessory)

Dimensional drawings

MPI DC 010 - 014 -018

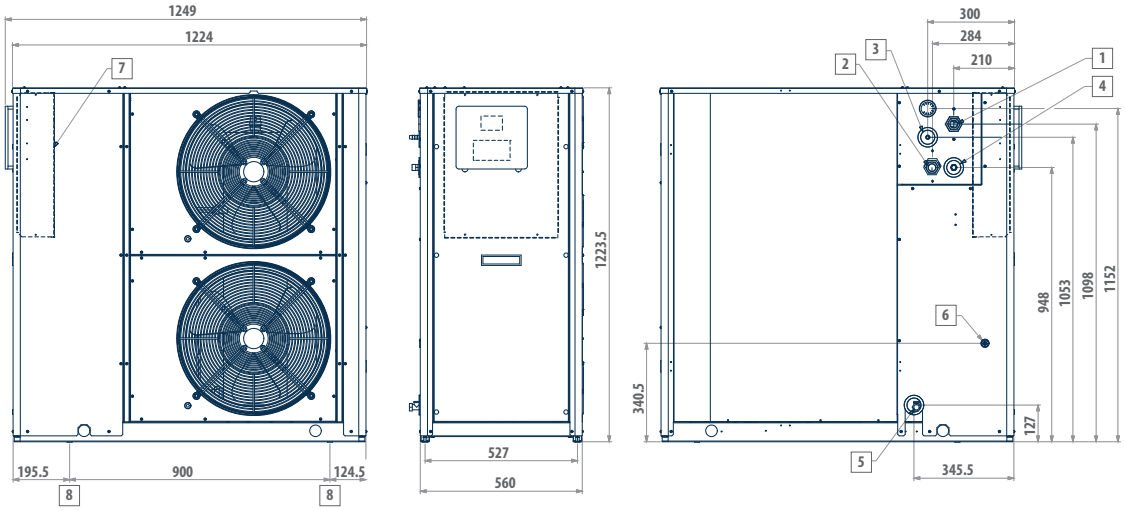

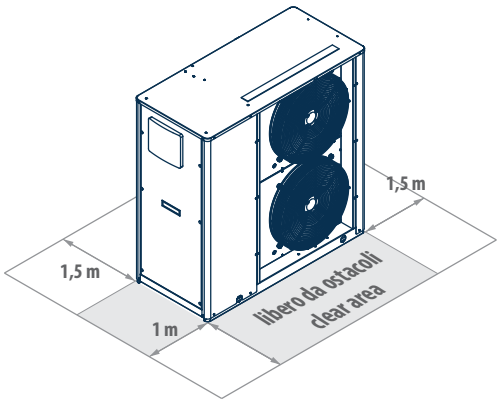

LEGEND	
1	Water inlet 1" ¼ female
2	Water outlet 1" ¼ female
3	Safety valve discharge outlet provided with rubber ring holder
4	Water supply ½" male (optional tap)
5	Water drainage ½" female
6	Power supply Ø 28 mm
7	Electric control board
8	Fastening points for vibration dampers (accessory)



Dimensional drawings

MPI DC 023 - 029

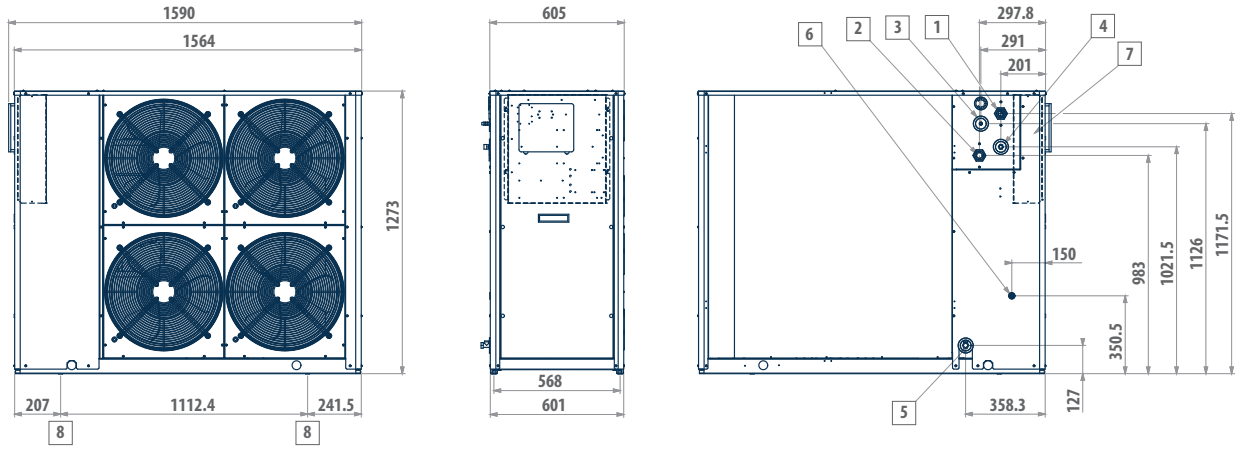

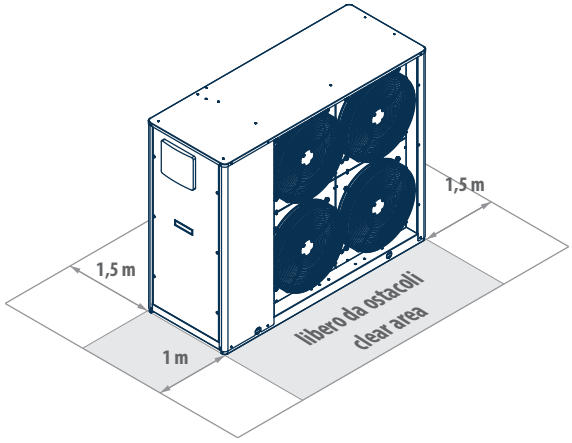

LEGEND

1	Water inlet 1" ¼ female
2	Water outlet 1" ¼ female
3	Safety valve discharge outlet provided with rubber ring holder
4	Water supply ½" male (optional tap)
5	Water drainage ½" female
6	Power supply Ø 28 mm
7	Electric control board
8	Fastening points for vibration dampers (accessory)

Outdoor packaged unit

MPE 4 - 76 kW





Rotary compressor | Scroll compressor | R-410A refrigerant | Cooling only | Cooling / Heating | Packaged unit | Axial fans

PLUS

- Completely configurable range
- Dual-compressor version that guarantees high efficiency at partial loads
- Production of chilled water up to an air temperature of 51 °C
- Built-in hydronic unit
- Access to the tax incentives provided for energy retrofitting

Efficiency under all operating conditions

MPE water chillers and heat pumps are designed for outdoor installation in both residential and industrial applications. The range uses R410A refrigerant, which assures high levels of performance with relatively low energy consumption and features 25 models in the chiller and heat pump version, with cooling capacities ranging from 4 to 76 kW and heating capacities from 5 to 85 kW. The finned block heat exchangers have been optimised for R410A and use 8 mm copper pipes, which permit a better heat exchange and quiet operation of the fans. Their generous sizing guarantees the production of chilled water even with outdoor air temperatures as high as 51°C.

In the MPET models, with a double compressor on the same cooling circuit, the working temperature range is extended further and efficiency at partial loads increases. In demanding working conditions the microprocessor controller activates the capacity control mode, doubling the condensing surface available to the single compressor.

The self-adaptive logic allows the setpoint to be adjusted automatically according to the outdoor temperature in order to reduce consumption and broaden the working temperature range.

The unit can also function in systems with a low water content, even without the use of a water buffer tank, thanks to the automatic adjustment which limits the number of compressor starts and thus extends the life of the compressors themselves.

The exclusive Smart Defrost System (optional feature available with the advanced controller) can correctly identify an impairment of performance in the outdoor exchanger due to the formation of ice and minimise the process time in relation to normal operation of the unit.

MPE heat pumps and water chillers are designed for heating or cooling the water to be used in air-conditioning systems for residential or commercial use.

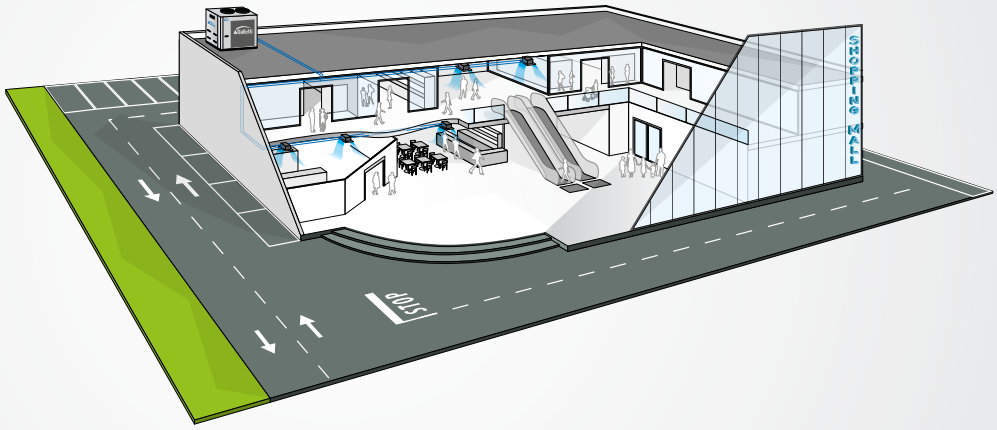



MAIN COMPONENTS

Structure

Painted galvanised sheet steel structure (RAL9002) for an attractive look and effective resistance to corrosive agents. Fastening devices are made of non-oxidizable carbon steel that has undergone surface-passivating treatments.

Customised hydraulic kit

The structure can accommodate hydronic kits with pump, expansion tank, and buffer tank. High head pump made entirely of stainless steel, already configured for use with mixtures of water and ethylene glycol up to 35% and provided with internal thermal protection.

Fan drive assembly

Electric fan with external rotor motor directly keyed to the axial fan, with internal thermal protection on the windings.



Finned block heat exchanger

Made of 8mm diameter copper pipes and aluminium fins. The heat exchangers' particular design makes it possible to speed up to the maximum the defrost phases in the versions with heat pump with obvious benefits to seasonal efficiency while operating in heating mode.

Electronic microprocessor controller

The electronic controller enables the complete control of the MPE unit. It can be easily accessed through a polycarbonate flap with IP65 protection rating.
It implements the compressor regulation logic and allows the complete management of the unit's other parts, the reversal of the cooling cycle, and the alarms.



CONFIGURATION

The models are completely configurable by selecting the version and the options. To the right is shown an example of configuration.

Version	Optional ▶	1	2	3	4	5	6	7	8	9	10	11	12	13
MPE008C0AA		A	1	S	0	E	0	3	M	2	0	G	2	1

To verify the compatibility of the options, use the selection software or the price list.

AVAILABLE VERSIONS

Cooling only versions

MPE..C0AA Unit with 400V - 3N - 50 Hz power supply
MPE..CMAA Unit with 230V - 1 - 50 Hz power supply
MPE..C2AA Unit with circuit breakers and 400V - 3N - 50 Hz power supply
MPE..C4AA Unit with circuit breakers and 230V - 1 - 50 Hz power supply

Versions with reversible heat pump

MPE…H0AA Unit with 400V - 3N - 50 Hz power supply
MPE…HMAA Unit with 230V - 1 - 50 Hz power supply
MPE...H2AA Unit with circuit breakers and 400V - 3N - 50 Hz power supply
MPE...H4AA Unit with circuit breakers and 230V - 1 - 50 Hz power supply

CONFIGURATION OPTIONS

1 - EXPANSION VALVE
- **0** Traditional
- **A** Electronic 230V
- **B** FLOOR PACK *

2 - PUMP AND ACCESSORIES
- **0** Absent
- **1** Pump + expansion tank + filling tap
- **2** Dual pump + expansion tank + filling tap

3 - INERTIAL BUFFER TANK
- **0** Absent
- **S** Present

4 - PARTIAL HEAT RECOVERY
- **0** Absent
- **D** Desuperheater with pump contact

5 - AIR FLOW MODULATION
- **0** Absent
- **C** Condensation control with fans adjusted by potentiometer
- **E** Condensation control, "EC brushless" electronically controlled fans

6 - ANTIFREEZE KIT
- **0** Absent
- **E** For units with evaporator only
- **P** For units with evaporator, pump and expansion tank
- **S** For units with evaporator, pump, expansion tank and tank

7 - SOUND INSULATION
- **0** Absent
- **1** Compressor compartment soundproofing
- **2** Compressor silencing housings
- **3** Opt 1 + Opt 2

8 - COOLING ACCESSORIES
- **0** None
- **M** Refrigerant pressure gauges

9 - REMOTE CONTROL
- **0** Absent
- **2** Output RS485 (Modbus or Carel protocol)
- **S** Simplified remote control
- **M** BASE microprocessor remote control (Modbus disabling)
- **X** ADVANCED microprocessor remote control
- **L** LON FTT10 serial card

10 -SPECIAL HEAT EXCHANGERS
- **0** Standard
- **R** Copper / copper
- **C** Cataphoresis
- **B** Fins pre-coated with epoxy paint

11 - HEAT EXCHANGER PROTECTIVE GRILLE
- **0** Absent
- **G** Present

12 - COMPRESSOR OPTIONS
- **0** Absent
- **1** Power factor correction capacitors
- **2** Soft starter
- **3** Power factor correction capacitors + soft starter
- **4** Low air/water temperature (crankcase heating element)

13 - CONTROL MICROPROCESSOR
- **1** BASE control microprocessor
- **2** ADVANCED control microprocessor
- **3** ADVANCED control microprocessor + GSM kit
- **4** ADVANCED control microprocessor + clock card

** Includes electronic valve and condensation control*

ACCESSORIES

- Base rubber vibration dumpers
- Kit of spring vibration dampers
- Inertial tank module for under-base installation
- Tank module connection kit
- Simplified remote control
- MYCHILLER BASE (RS485 is a mandatory accessory)
- MYCHILLER PLUS (RS485 is a mandatory accessory)

Rated technical data

MPE-C		004 M	005 M	007 M	008 M	008	010 M
Power supply	V-ph-Hz	230-1-50	230-1-50	230-1-50	230-1-50	400-3N-50	230-1-50
Cooling capacity (1) (E)	kW	4,10	5,09	6,64	8,43	8,30	9,17
Total power input (1) (E)	kW	1,35	1,71	2,28	3,11	3,38	3,31
EER (1) (E)		3,03	2,98	2,92	2,71	2,45	2,77
ESEER (E)		3,54	3,39	3,32	3,36	2,98	3,38
Eurovent Efficiency class		B	B	B	C	E	C
Water flow rate in cooling mode (1)	l/h	706	876	1145	1452	1429	1590
Water pressure drop (1) (E)	kPa	<5	<5	6	6	6	34
Available pressure head (1)	kPa	77	74	70	67	67	115
Maximum absorbed current (without accessories)	A	10	12	15	24	9	26
Startup current	A	38	44	63	98	49	99
Startup current with softstarter kit	A	26	30	44	34	68	33
n° of scroll compressor/ circuits		1 / 1	1 / 1	1 / 1	1 / 1	1 / 1	1 / 1
Buffer tank volume	dm^3	1	1	1	1	1	5
Expansion vessel	dm^3	20	20	20	20	20	30
Sound power level (2) (E)	dB(A)	66	66	67	67	67	69
Weight without accessories	kg	98	100	107	110	110	202
Weight with pump and full tank	kg	92	94	101	104	104	228

MPE-C		010	013	015	018	020	024
Power supply	V-ph-Hz	400-3N-50	400-3N-50	400-3N-50	400-3N-50	400-3N-50	400-3N-50
Cooling capacity (1) (E)	kW	9,16	12,7	14,8	17,0	19,4	23,6
Total power input (1) (E)	kW	3,31	4,32	5,29	6,52	7,31	8,31
EER (1) (E)		2,76	2,95	2,81	2,61	2,66	2,84
ESEER (E)		3,38	3,69	3,53	3,30	3,21	3,42
Eurovent Efficiency class		C	B	C	D	D	C
Water flow rate in cooling mode (1)	l/h	1588	2217	2571	2952	3373	4090
Water pressure drop (1) (E)	kPa	34	61	38	51	51	49
Available pressure head (1)	kPa	115	81	102	130	123	113
Maximum absorbed current (without accessories)	A	14	17	20	24	26	28
Startup current	A	50	65	68	75	104	158
Startup current with softstarter kit	A	68	44	46	51	72	110
n° of scroll compressor/ circuits		1 / 1	1 / 1	1 / 1	1 / 1	1 / 1	1 / 1
Buffer tank volume	dm^3	5	5	5	5	5	5
Expansion vessel	dm^3	30	30	30	50	50	50
Sound power level (2) (E)	dB(A)	69	69	69	71	71	72
Weight without accessories	kg	202	209	209	260	260	280
Weight with pump and full tank	kg	228	235	235	306	296	327

(1) Water temperature 12/7 °C, outdoor air temperature 35 °C (UNI EN 14511:2011)
(2) Sound power level measured according to UNI EN ISO 9614
(E) EUROVENT certified data



Rated technical data

MPE-C		027	028	032	035	040	054	066
Power supply	V-ph-Hz	400-3N-50	400-3N-50	400-3N-50	400-3N-50	400-3N-50	400-3N-50	400-3N-50
Cooling capacity (1) (E)	kW	26,4	27,9	31,3	34,7	39,4	53,7	65,6
Total power input (1) (E)	kW	9,52	8,87	10,3	11,7	13,0	18,2	24,6
EER (1) (E)		2,77	3,14	3,03	2,96	3,02	2,95	2,66
ESEER (E)		3,36	3,77	3,63	3,61	3,68	3,60	3,30
Eurovent Efficiency class		C	A	B	B	B	B	D
Water flow rate in cooling mode (1)	l/h	4565	4823	5415	6008	6816	8829	11342
Water pressure drop (1) (E)	kPa	34	40	51	41	43	55	59
Available pressure head (1)	kPa	123	141	126	130	119	110	95
Maximum absorbed current (without accessories)	A	34	36	37	42	43	45	46
Startup current	A	132	133	166	161	163	163	165
Startup current with softstarter kit	A	91	91	114	111	112	110	112
n° of scroll compressor/ circuits		1 / 1	1 / 1	1 / 1	1 / 1	1 / 1	1 / 1	1 / 1
Buffer tank volume	dm^3	5	8	8	8	8	8	8
Expansion vessel	dm^3	50	125	125	125	125	125	125
Sound power level (2) (E)	dB(A)	72	73	73	73	75	78	78
Weight without accessories	kg	285	370	370	390	390	500	530
Weight with pump and full tank	kg	332	492	492	513	513	620	650

MPE-C		T30	T34	T40	T45	T54	T61	T69	T76
Power supply	V-ph-Hz	400-3N-50	400-3N-50	400-3N-50	400-3N-50	400-3N-50	400-3N-50	400-3N-50	400-3N-50
Cooling capacity (1) (E)	kW	29,8	33,9	39,3	44,2	54,2	61,4	69,3	75,6
Total power input (1) (E)	kW	10,6	12,8	13,9	16,8	18,7	21,7	24,1	28,0
EER (1) (E)		2,82	2,64	2,82	2,64	2,90	2,83	2,88	2,70
ESEER (E)		4,17	4,11	4,15	4,04	4,03	4,01	4,18	4,16
Eurovent Efficiency class		C	D	C	D	B	C	C	C
Water flow rate in cooling mode (1)	l/h	5156	5854	6799	7648	9378	10629	11989	13075
Water pressure drop (1) (E)	kPa	30	38	45	57	53	66	52	60
Available pressure head (1)	kPa	150	134	117	97	138	120	128	114
Maximum absorbed current (without accessories)	A	40	46	50	57	48	53	57	69
Startup current	A	86	96	127	130	177	187	202	229
Startup current with softstarter kit	A	46	51	71	82	105	110	119	134
n° of scroll compressor/ circuits		2 / 1	2 / 1	2 / 1	2 / 1	2 / 1	2 / 1	2 / 1	2 / 1
Buffer tank volume	dm^3	8	8	8	8	8	8	8	8
Expansion vessel	dm^3	125	125	125	125	125	125	125	125
Sound power level (2) (E)	dB(A)	72	72	72	72	81	81	81	81
Weight without accessories	kg	410	410	430	430	557	692	692	786
Weight with pump and full tank	kg	532	533	553	553	665	800	800	894

(1) Water temperature 12/7 °C, outdoor air temperature 35 °C (UNI EN 14511:2011)
(2) Sound power level measured according to UNI EN ISO 9614
(E) EUROVENT certified data

Rated technical data

MPE-H		004 M	005 M	007 M	008 M	008	010 M
Power supply	V-ph-Hz	230-1-50	230-1-50	230-1-50	230-1-50	400-3N-50	230-1-50
Cooling capacity (1) (E)	kW	4,02	4,99	6,51	8,26	8,13	8,99
Total power input (1)	kW	1,35	1,71	2,28	3,11	3,38	3,31
EER (1) (E)		2,97	2,92	2,86	2,65	2,41	2,72
ESEER (E)		3,47	3,32	3,26	3,29	2,92	3,31
Eurovent Efficiency class		B	B	C	D	E	C
Water flow rate in cooling mode (1)	l/h	692	859	1122	1423	1400	1559
Water pressure drop (1) (E)	kPa	<5	<5	6	6	6	33
Available pressure head (1)	kPa	77	74	70	67	67	115
Heating capacity (2) (E)	kW	4,73	5,88	7,79	9,93	10,3	11,0
Total power input (2)	kW	1,47	1,83	2,44	3,26	3,66	3,73
COP (2) (E)		3,22	3,22	3,19	3,05	2,82	2,94
Efficiency class Eurovent		A	A	B	B	C	C
Water flow rate in heating mode (2)	l/h	820	1020	1348	1720	1788	1884
Water pressure drop (2) (E)	kPa	<5	<5	8	8	8	46
Available pressure head (2)	kPa	75	73	66	63	63	104
Maximum absorbed current (without accessories)	A	9,8	11,6	15,3	24,2	9,2	26,3
Startup current	A	38	44	63	98	49	99
Startup current with softstarter kit	A	26	30	44	34	68	33
n° of scroll compressor/ circuits		1 / 1	1 / 1	1 / 1	1 / 1	1 / 1	1 / 1
Buffer tank volume	dm^3	1	1	1	1	1	5
Expansion vessel	dm^3	20	20	20	20	20	30
Sound power level (3) (E)	dB(A)	66	66	67	67	67	69
Weight without accessories	kg	103	105	112	115	115	212
Weight with pump and full tank	kg	97	99	106	109	109	238

MPE-H		010	013	015	018	020	024
Power supply	V-ph-Hz	400-3N-50	400-3N-50	400-3N-50	400-3N-50	400-3N-50	400-3N-50
Cooling capacity (1) (E)	kW	8,98	12,5	14,5	16,7	19,1	23,1
Total power input (1)	kW	3,31	4,31	5,28	6,51	7,30	8,31
EER (1) (E)		2,71	2,90	2,75	2,56	2,61	2,78
ESEER (E)		3,31	3,62	3,46	3,23	3,15	3,35
Eurovent Efficiency class		C	B	C	D	D	C
Water flow rate in cooling mode (1)	l/h	1557	2172	2520	2894	3306	4008
Water pressure drop (1) (E)	kPa	33	59	36	49	49	47
Available pressure head (1)	kPa	115	81	102	130	123	113
Heating capacity (2) (E)	kW	11,0	15,4	17,8	20,3	23,1	27,4
Total power input (2)	kW	3,73	4,92	5,66	6,87	7,42	8,38
COP (2) (E)		2,94	3,12	3,14	2,96	3,12	3,28
Efficiency class Eurovent		C	B	B	C	B	A
Water flow rate in heating mode (2)	l/h	1884	2628	3053	3493	3976	4721
Water pressure drop (2) (E)	kPa	46	85	52	71	70	63
Available pressure head (2)	kPa	104	59	87	107	101	93
Maximum absorbed current (without accessories)	A	14,4	17,4	20,0	24,3	26,2	27,6
Startup current	A	50	65	68	75	104	158
Startup current with softstarter kit	A	68	44	46	51	72	110
n° of scroll compressor/ circuits		1 / 1	1 / 1	1 / 1	1 / 1	1 / 1	1 / 1
Buffer tank volume	dm^3	5	5	5	5	5	5
Expansion vessel	dm^3	30	30	30	50	50	50
Sound power level (3) (E)	dB(A)	69	69	69	71	71	72
Weight without accessories	kg	212	219	220	273	273	295
Weight with pump and full tank	kg	238	245	246	319	309	342

(1) Water temperature 12/7 °C, outdoor air temperature 35 °C (UNI EN 14511:2011)
(2) Water temperature 40/45 °C, outdoor air temperature 7 °C D.B. - 6 °C W.B. (UNI EN 14511:2011)
(3) Sound power level measured according to UNI EN ISO 9614
(E) EUROVENT certified data



Rated technical data

MPE-H		027	028	032	035	040	054	066
Power supply	V-ph-Hz	400-3N-50	400-3N-50	400-3N-50	400-3N-50	400-3N-50	400-3N-50	400-3N-50
Cooling capacity (1) (E)	kW	25,9	27,3	30,6	34,0	38,6	51,6	62,3
Total power input (1)	kW	9,51	8,86	10,3	11,7	13,0	18,2	24,6
EER (1) (E)		2,72	3,08	2,97	2,90	2,97	2,84	2,54
ESEER (E)		3,29	3,70	3,56	3,54	3,61	3,50	3,20
Eurovent Efficiency class		C	B	B	B	B	C	D
Water flow rate in cooling mode (1)	l/h	4474	4833	5307	5888	6681	8932	10776
Water pressure drop (1) (E)	kPa	32	40	49	39	42	56	54
Available pressure head (1)	kPa	123	143	123	128	117	107	92
Heating capacity (2) (E)	kW	30,1	31,5	35,9	39,5	45,2	61,4	75,8
Total power input (2)	kW	9,11	9,38	10,8	11,9	13,5	18,9	23,8
COP (2) (E)		3,30	3,36	3,34	3,33	3,36	3,25	3,19
Efficiency class Eurovent		A	A	A	A	A	A	B
Water flow rate in heating mode (2)	l/h	5187	5396	6173	6813	7800	10575	13063
Water pressure drop (2) (E)	kPa	43	49	64	51	54	82	81
Available pressure head (2)	kPa	106	128	109	114	99	76	52
Maximum absorbed current (without accessories)	A	34	36	37	42	43	45	46
Startup current	A	132	133	166	161	163	163	165
Startup current with softstarter kit	A	91	91	114	111	112	110	112
n° of scroll compressor/ circuits		1 / 1	1 / 1	1 / 1	1 / 1	1 / 1	1 / 1	1 / 1
Buffer tank volume	dm^3	5	8	8	8	8	8	8
Expansion vessel	dm^3	50	125	125	125	125	125	125
Sound power level (3) (E)	dB(A)	72	73	73	73	75	78	78
Weight without accessories	kg	300	400	400	420	420	530	560
Weight with pump and full tank	kg	347	522	522	543	543	650	680

MPE-H		T30	T34	T40	T45	T54	T61	T69	T76
Power supply	V-ph-Hz	400-3N-50	400-3N-50	400-3-50	400-3-50	400-3N-50	400-3N-50	400-3N-50	400-3N-50
Cooling capacity (1) (E)	kW	29,3	33,2	38,5	43,3	53,1	60,2	68,1	74,1
Total power input (1)	kW	10,6	12,8	13,9	16,7	18,7	21,7	24,0	28,0
EER (1) (E)		2,76	2,59	2,77	2,59	2,84	2,78	2,83	2,65
ESEER (E)		4,09	4,03	4,06	3,96	4,01	3,99	4,16	4,15
Eurovent Efficiency class		C	D	C	D	C	C	C	D
Water flow rate in cooling mode (1)	l/h	5053	5737	7495	7495	9189	10423	11766	12818
Water pressure drop (1) (E)	kPa	29	37	44	55	51	64	50	58
Available pressure head (1)	kPa	148	133	116	94	136	119	127	115
Heating capacity (2) (E)	kW	34,6	39,5	46,7	53,2	60,4	68,1	77,0	85,4
Total power input (2)	kW	11,1	13,1	14,3	16,7	19,0	22,1	23,9	27,4
COP (2) (E)		3,12	3,02	3,25	3,18	3,19	3,08	3,22	3,11
Efficiency class Eurovent		B	B	A	B	B	B	A	B
Water flow rate in heating mode (2)	l/h	5976	6818	8042	9155	10412	11733	13292	14730
Water pressure drop (2) (E)	kPa	39	52	58	74	58	74	56	69
Available pressure head (2)	kPa	131	113	95	65	126	100	110	87
Maximum absorbed current (without accessories)	A	40	46	50	57	48	53	57	69
Startup current	A	86	96	127	130	177	187	202	229
Startup current with softstarter kit	A	46	51	71	82	105	110	119	134
n° of scroll compressor/ circuits		2 / 1	2 / 1	2 / 1	2 / 1	2 / 1	2 / 1	2 / 1	2 / 1
Buffer tank volume	dm^3	8	8	8	8	8	8	8	8
Expansion vessel	dm^3	125	125	125	125	125	125	125	125
Sound power level (3) (E)	dB(A)	72	72	72	72	81	81	81	81
Weight without accessories	kg	430	430	430	450	660	702	702	792
Weight with pump and full tank	kg	552	552	553	573	768	810	810	900

(1) Water temperature 12/7 °C, outdoor air temperature 35 °C (UNI EN 14511:2011)
(2) Water temperature 40/45 °C, outdoor air temperature 7 °C D.B. - 6 °C W.B. (UNI EN 14511:2011)
(3) Sound power level measured according to UNI EN ISO 9614
(E) EUROVENT certified data

Dimensional drawings

MPE 4 - 8

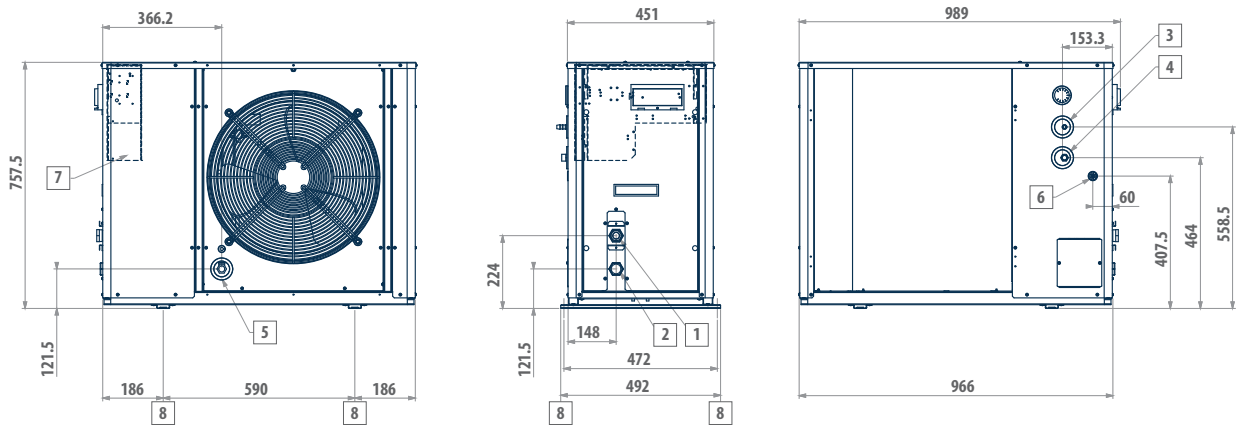

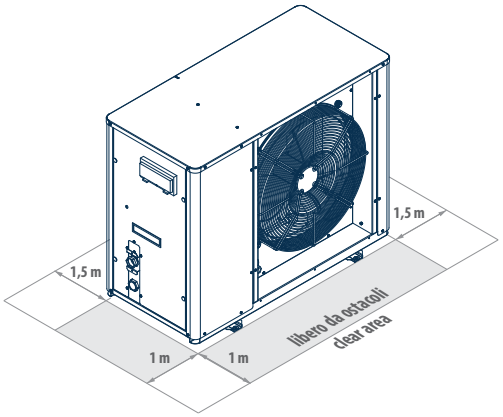

LEGEND	
1	Water inlet 1" female
2	Water outlet 1" female
3	Safety valve discharge outlet provided with rubber ring holder
4	Water supply ½" male (optional tap)
5	Water drainage ½" female
6	Power supply Ø 28 mm
7	Electric control board
8	Fastening points for vibration dampers (accessory)



Dimensional drawings

MPE 10 - 15

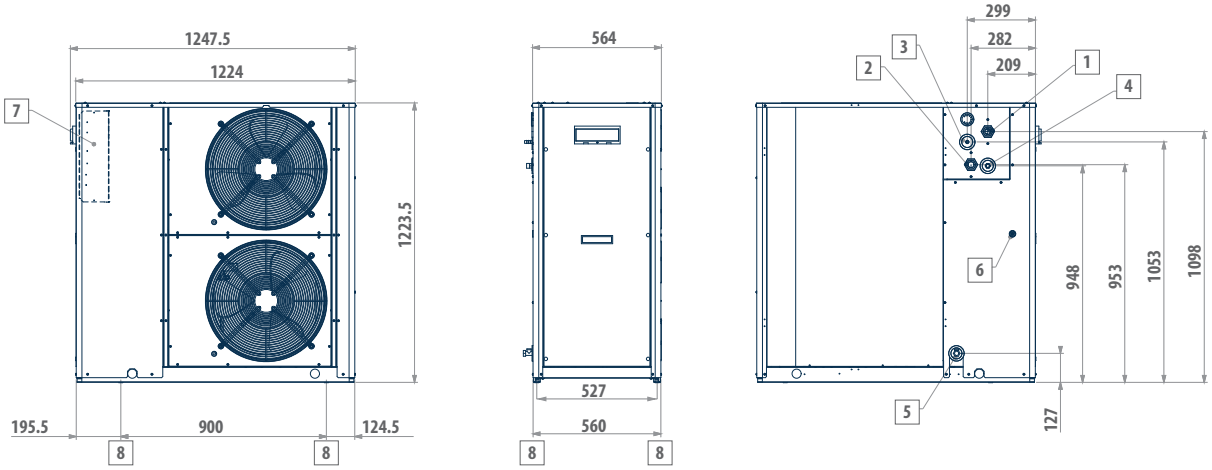

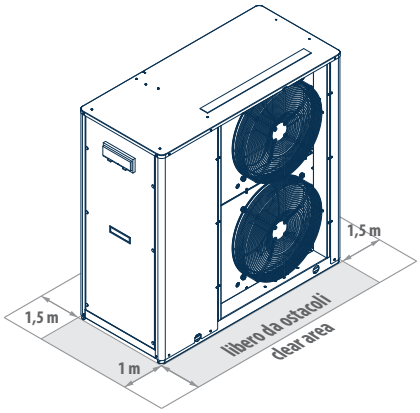

LEGEND	
1	Water inlet 1" female
2	Water outlet 1" female
3	Safety valve discharge outlet provided with rubber ring holder
4	Water supply ½" male (optional tap)
5	Water drainage ½" female
6	Power supply Ø 28 mm
7	Electric control board
8	Vibration dampers

Dimensional drawings

MPE 18 - 27

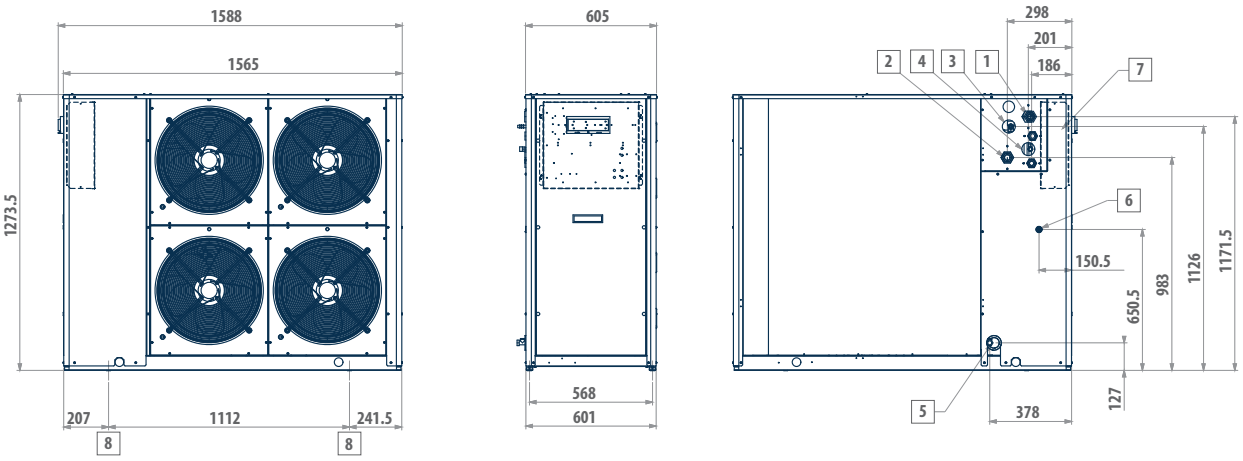

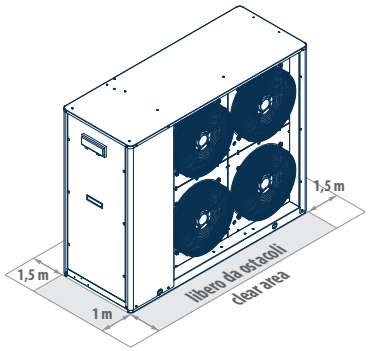

LEGEND	
1	Water inlet 1" ¼ female
2	Water outlet 1" ¼ female
3	Safety valve discharge outlet provided with rubber ring holder
4	Water supply ½" male (optional tap)
5	Water drainage ½" female
6	Power supply Ø 28 mm
7	Electric control board
8	Vibration dampers



Dimensional drawings

MPE 28 ÷ 40 - MPE T30 ÷ T45

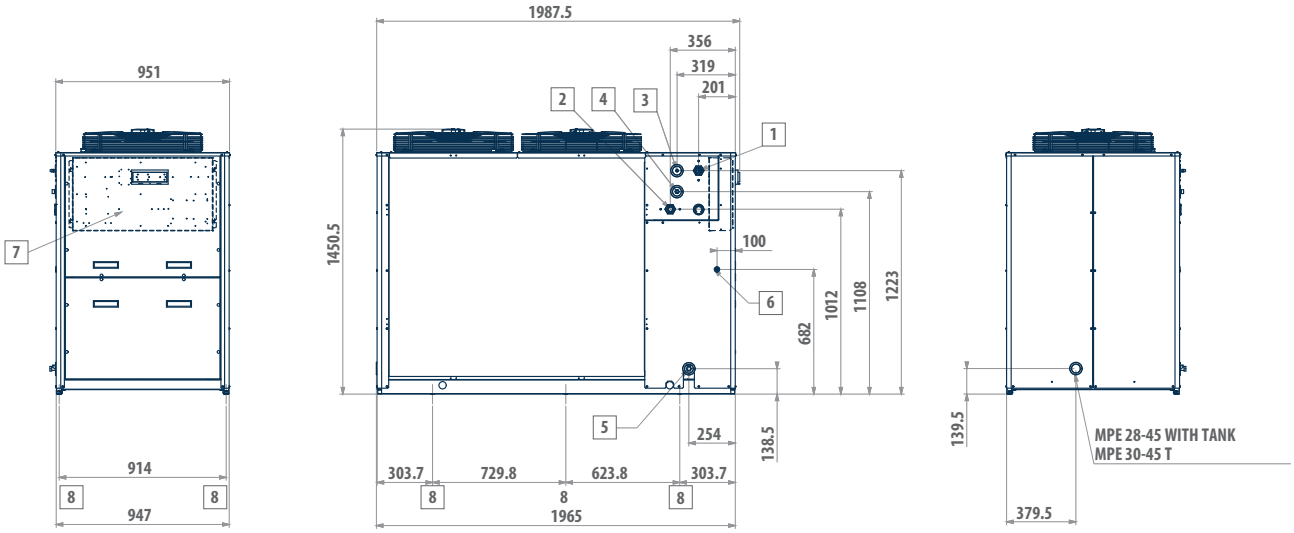

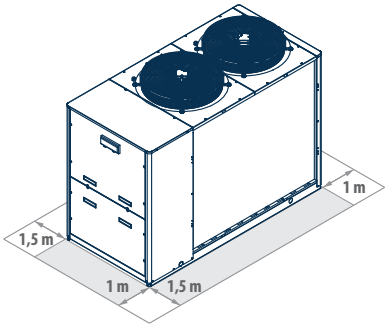

LEGEND	
1	Water inlet 1" ¼ female
2	Water outlet 1" ¼ female
3	Safety valve discharge outlet provided with rubber ring holder
4	Water supply ½" male (optional tap)
5	Water drainage ½" female
6	Power supply Ø 37 mm
7	Electric control board
8	Vibration dampers

Dimensional drawings

MPE 54 ÷ 66

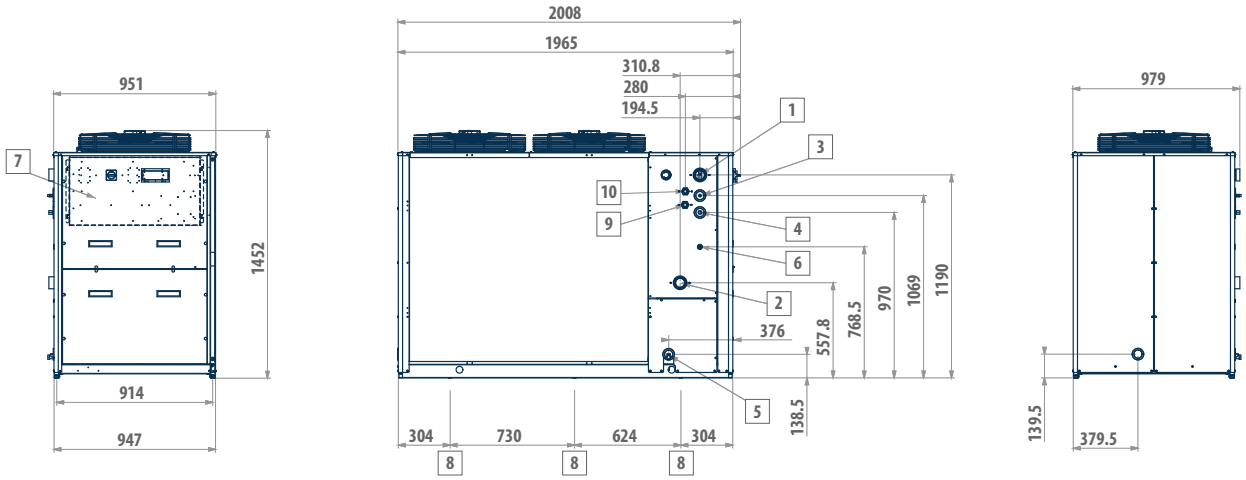

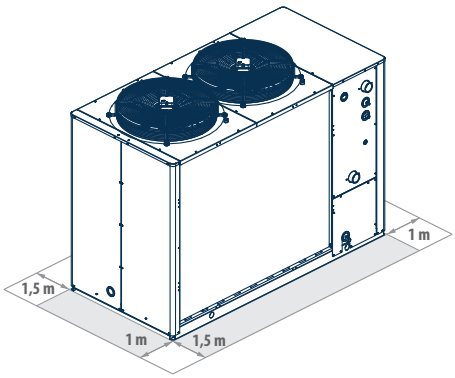

LEGEND	
1	Water inlet 2" female
2	Water outlet 2" female
3	Safety valve discharge outlet provided with rubber ring holder
4	Water supply ½" male
5	Water drainage ½" female
6	Power supply
7	Electric control board
8	Fastening points for vibration dampers (accessory)
9	Desuperheater water inlet 1" female
10	Desuperheater water outlet 1" female



Dimensional drawings

MPE T54 ÷ T76

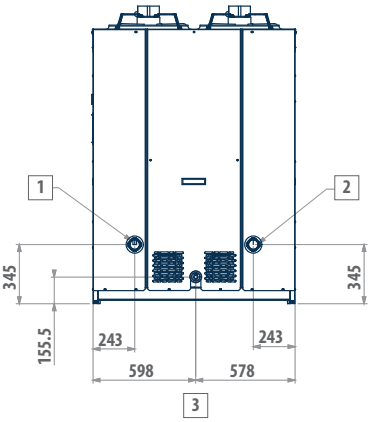

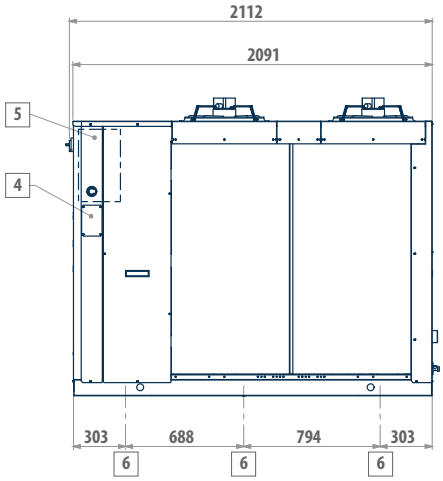

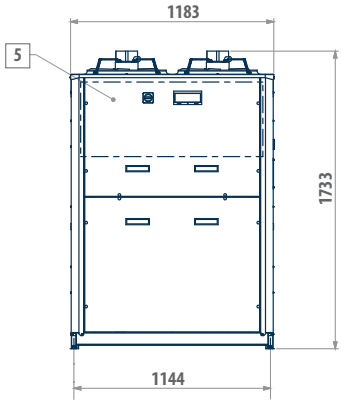

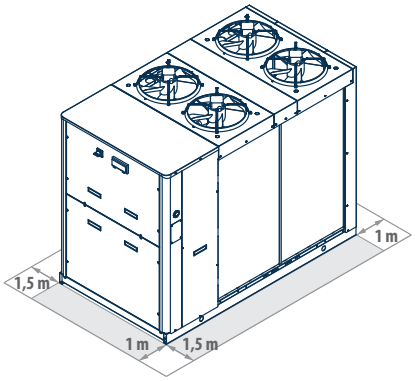

LEGEND

1	Water inlet 2" female
2	Water outlet 2" female
3	Water drainage ½" female
4	Power supply
5	Electric control board
6	Fastening points for vibration dampers

Outdoor packaged unit

SCX 80 - 360 kW

NEW PRODUCT

JUNE **2015**





Scroll compressor | R-410A refrigerant | Cooling only | Cooling / Heating | Packaged unit | Axial fans

High configurability and efficiency at partial loads

SCX is the new series of air-cooled heat pumps and chillers designed to meet the requirements of efficiency, configurability, reliability, and ease of maintenance.
The series comprises 22 models with cooling capacities ranging from 80 to 360 kW. They are available both in models with a cooling function only and in models with heat pump operation.
The finned block heat exchanger is generously sized to optimize operation as both evaporator and condenser by type of fin and circuit.
The solution of a single heat exchanger with delivered power of up to 160 kW was adopted due to the complete accessibility to the internal water and cooling circuit for the periodic inspection and maintenance operations. The solution of a single heat exchanger makes it possible to reduce the space necessary for the installation of the units.
The electric axial fans with blades with an exclusive aerodynamic profile (HyBlade®) are characterized by extraordinary aeraulic and acoustic performance and represent the current state of the art for axial fans.
The AxiTop® diffuser allows fan efficiency to be further increased with benefits in terms of noise level (together with condensation control) and unit efficiency.
The SCX design adopts innovative solutions in the use and arrangement of the hydronic kit's internal components, which is simplified to reduce the number of connections and minimize the water side head loss inside the machine.
Every model is completely configurable with a choice of control, hydraulic, acoustic, and heat recovery options that do not result in any change to the dimensions.

PLUS

- Completely configurable range
- Incorporable hydronic kits
- HyBlade® fans
- Tandem and trio solutions for high efficiency at partial loads
- Remote connectivity with the most common protocols

The choice to install scroll compressors in a tandem or trio configuration on the same cooling circuit is a move in the right direction in terms of machine efficiency at partial loads, which is the normal operating condition for air conditioning systems.

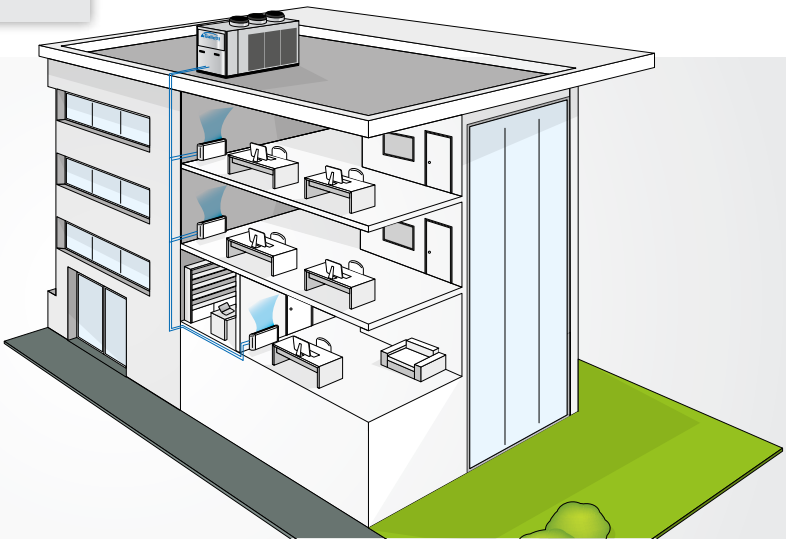



MAIN COMPONENTS

Structure

Made in galvanised steel sheet with a polyester powder coating for outdoors. Base with reinforcement modules for eliminating any deformities resulting from impacts sustained in the transportation and handling phase.

Scroll compressors

Scroll type compressors in a tandem or trio configuration that can be sound insulated. The adopted components' efficiency, reliability, and noise emission levels represent the state of the art for scroll compressors.

Electronic microprocessor controller

In standard or advanced version, it enables the complete control of the units. It can be easily accessed through a polycarbonate flap with IP65 protection rating. The electronic control system allows the setpoint to be adjusted automatically according to the outdoor temperature in order to reduce consumption and broaden the working temperature range. The advanced version makes it possible to construct LAN networks for the parallel control of 4 units and the management of BACNET and LON communication protocols, as well as the modulation of the pump assembly, of the Smart Defrost System.

Fan drive assembly

Electric fan with 6-pole external rotor motor directly keyed to the axial fan, with internal thermal protection on the windings, complete with safety grille and dedicated supporting structure. Electric fans with BLDC motor are available on request.



Heat exchanger

Made of 8mm diameter copper pipes and aluminium fins. The special engineering of the heat exchangers allows defrost cycles to be carried out at maximum speed in the models with heat pump operation, which brings clear benefits in terms of the integrated efficiency of the whole cycle.

CONFIGURATION

The models are completely configurable by selecting the version and the options. To the right is shown an example of configuration.

Version	Fields ▶	1	2	3	4	5	6	7	8	9	10	11	12	13
SCX162CS0A		0	1	0	S	C	P	1	0	L	0	T	0	2

To verify the compatibility of the options, use the selection software or the price list.

AVAILABLE VERSIONS

Cooling only versions

SCX..CS0A	400V-3N-50Hz power supply
SCX..CS1A	230V-3-50Hz power supply
SCX..CS2A	400V-3N-50Hz power supply + circuit breakers
SCX..CS3A	230V-3-50Hz power supply + circuit breakers
SCX..CS4A	400V-3-50Hz power supply + transformer
SCX..CS5A	400V-3-50Hz power supply + transformer + circuit breakers

Versions with reversible heat pump

SCX..HS0A	400V-3N-50 Hz power supply
SCX..HS1A	230V-3-50 Hz power supply
SCX..HS2A	400V-3N-50 Hz power supply + circuit breakers
SCX..HS3A	230V-3-50 Hz power supply + circuit breakers
SCX..HS4A	400V-3-50Hz power supply + transformer
SCX..HS5A	400V-3-50Hz power supply + transformer + circuit breakers

CONFIGURATION OPTIONS

1 - EXPANSION VALVE
- **0** Traditional
- **A** Electronic 230V

2 - PUMP AND ACCESSORIES
- **0** Absent
- **1** Standard pump + expansion tank + filling tap
- **2** Dual standard pump + expansion tank + filling tap
- **3** HP pump + expansion tank + filling tap
- **4** Dual HP pump + expansion tank + filling tap
- **5** Option 1 + inverter (only with advanced microprocessor)
- **6** Option 2 + inverter (only with advanced microprocessor)
- **7** Option 3 + inverter (only with advanced microprocessor)
- **8** Option 4 + inverter (only with advanced microprocessor)

3 - INERTIAL BUFFER TANK
- **0** Absent
- **S** Present

4 - PARTIAL HEAT RECOVERY (the condensation control must be added)
- **0** Absent
- **D** Desuperheater with pump contact (recovery 25%)

5 - AIR FLOW MODULATION
- **0** Absent
- **C** Condensation control with fans adjusted by potentiometer
- **E** Condensation control with BLDC fans

6 - ANTIFREEZE KIT
- **0** Absent
- **E** For units with evaporator only
- **P** For units with evaporator, pump and expansion tank
- **S** For units with evaporator, pump, expansion tank and tank

7 - SOUND INSULATION
- **0** Absent
- **1** Sound attenuation of the fans (AXITOP®)
- **2** Compressor silencing housings
- **3** Opt 1 + Opt 2

8 - COOLING ACCESSORIES
- **0** None
- **M** Refrigerant pressure gauges
- **R** Filter taps

9 - REMOTE CONTROL
- **0** Absent
- **2** Output RS485 (Modbus or Carel protocol)
- **S** Simplified remote control
- **M** BASE microprocessor remote control (modbus disabling)
- **X** ADVANCED microprocessor remote control
- **L** LON FTT10 serial card
- **B** BACNET serial card

10 -SPECIAL HEAT EXCHANGERS
- **0** Standard
- **R** Copper
- **C** Cataphoresis
- **I** Hydrophilic
- **P** Fins pre-coated with epoxy paint

11 - PROTECTION OF HEAT EXCHANGERS
- **0** Absent
- **G** Protective grille
- **T** Anti-hail roof

12 - COMPRESSOR OPTIONS
- **0** Absent
- **1** Power factor correction capacitors
- **2** Soft starter
- **3** Power factor correction capacitors + soft starter
- **4** Low air/water temperature (crankcase heating element)
- **5** Opt 4 + Opt 2

13 - CONTROL MICROPROCESSOR
- **1** BASE control microprocessor
- **2** ADVANCED control microprocessor
- **3** ADVANCED control microprocessor + GSM kit

ACCESSORIES

- **A** Base rubber vibration dumpers
- **B** Base spring vibration dumpers
- **C** Pair of VIC-TAULIC quick couplings
- **D** Service kit for diagnosis
- **E** ON/OFF status of the compressors
- **F** Remote control for power step limits
- **G** Configurable digital alarm card
- **H** Unit lifting pipes
- \- MYCHILLER BASE (RS485 is a mandatory accessory)
- \- MYCHILLER PLUS (RS485 is a mandatory accessory)

Rated technical data of SCX C water chillers

SCX..CS		82	92	102	112	122	142	162
Power supply	V-ph-Hz	400-3N-50						
Cooling capacity (1) E	kW	78,2	94,0	98,6	111	121	135	153
Power supply (1) E	kW	27,1	34,5	34,4	37,8	42,8	51,1	56,5
EER (1) E		2,88	2,73	2,87	2,93	2,83	2,64	2,72
ESEER E		3,81	3,59	3,49	3,90	3,76	3,41	3,79
Eurovent Efficiency Class		C	C	C	B	C	D	C
Water flow (1)	l/h	12909	15523	16433	18479	20203	22410	25069
Water pressure drop (1) E	kPa	17	21	26	22	26	32	26
Standard pump available pressure head (1)	kPa	138	117	110	106	96	172	168
Maximum current absorption	A	69	76	78	90	99	111	123
Start up current	A	189	269	237	279	286	329	329
Start up current with softstarter kit	A	168	253	214	257	259	296	296
nr. of compressors / circuits		2\1	2\1	2\1	2\1	2\1	2\1	2\1
Water tank volume	dm^3	200	200	340	340	340	340	340
Expansion vessel	dm^3	12	12	12	12	12	12	12
Sound pressure level (2)	dB(A)	80	83	85	86	86	86	86
Operating weight of base unit	kg	655	735	735	735	1015	1060	1090
Operating weight of unit with pump and full tank	kg	890	971	1112	1112	1392	1440	1470

SCX..CS		174	194	204	192	212	243	214	224
Power supply	V-ph-Hz	400-3N-50							
Cooling capacity (1) E	kW	173	184	194	185	199	233	208	222
Power supply (1) E	kW	61,3	61,1	66,5	62,9	69,3	82,6	71,2	76,1
EER (1) E		2,83	3,02	2,92	2,94	2,88	2,83	2,92	2,91
ESEER E		3,82	3,94	4,15	4,09	4,02	3,80	4,16	4,20
Eurovent Efficiency Class		C	B	B	B	C	C	B	B
Water flow (1)	l/h	30559	32764	34053	30785	33188	37977	35375	37984
Water pressure drop (1) E	kPa	40	43	46	18	33	28	41	39
Standard pump available pressure head (1)	kPa	150	137	124	172	177	168	154	145
Maximum current absorption	A	151	149	159	142	155	194	192	218
Start up current	A	288	290	295	420	431	376	337	344
Start up current with softstarter kit	A	230	231	233	386	389	312	275	279
nr. of compressors / circuits		4\2	4\2	4\2	2\1	2\1	3\1	4\2	4\2
Water tank volume	dm^3	750	750	750	600	600	600	750	750
Expansion vessel	dm^3	24	24	24	24	24	24	24	24
Sound pressure level (2)	dB(A)	84	86	86	88	90	88	87	88
Operating weight of base unit	kg	1442	1462	1462	1450	1400	1600	1472	1622
Operating weight of unit with pump and full tank	kg	2266	2286	2286	2050	2101	2170	2366	2366

(1) Water temperature 12/7°C; outdoor air temperature 35°C (14511:2011)
(2) Sound power level measured according to UNI EN ISO 9614
(E) EUROVENT certified data



Rated technical data of SCX C water chillers

SCX..CS		244	264	284	304	324	344	364
Power supply	V-ph-Hz	400-3N-50						
Cooling capacity (1) E	kW	231	264	282	302	316	341	353
Power supply (1) E	kW	82,1	95,9	103	109	115	126	134
EER (1) E		2,81	2,76	2,74	2,78	2,75	2,71	2,63
ESEER E		4,08	3,99	3,58	3,64	3,60	3,75	3,65
Eurovent Efficiency Class		C	C	C	C	C	C	D
Water flow (1)	l/h	37554	43886	47205	50072	52134	56162	58226
Water pressure drop (1) E	kPa	42	29	33	37	31	31	38
Standard pump available pressure head (1)	kPa	147	158	148	139	140	133	122
Maximum current absorption	A	192	218	229	241	253	267	306
Start up current	A	351	365	408	416	426	428	526
Start up current with softstarter kit	A	281	285	298	324	327	328	419
nr. of compressors / circuits		4\2	4\2	4\2	4\2	4\2	4\2	4\2
Water tank volume	dm^3	750	750	750	750	750	750	750
Expansion vessel	dm^3	24	24	24	24	24	24	24
Sound pressure level (2)	dB(A)	88	88	89	89	89	91	92
Operating weight of base unit	kg	1622	1882	1914	1949	1949	1949	1949
Operating weight of unit with pump and full tank	kg	2480	2480	2800	2835	2835	2870	2870

(1) Water temperature 12/7°C; outdoor air temperature 35°C (14511:2011)
(2) Sound power level measured according to UNI EN ISO 9614
(E) EUROVENT certified data

Rated technical data of SCX H heat pumps

SCX..HS		82	92	102	112	122	142	162
Power supply	V-ph-Hz	400 - 3N - 50						
Cooling capacity (1) E	kW	74,7	89,8	95,0	107	117	130	145
Power supply (1) E	kW	27,3	34,5	34,7	38,6	43,7	51,6	57,8
EER (1) E		2,74	2,60	2,74	2,77	2,67	2,55	2,51
ESEER E		3,63	3,45	3,35	3,71	3,59	3,16	3,51
Eurovent Efficiency Class		C	D	C	C	D	D	D
Water flow (1)	l/h	12909	15523	16433	18479	20203	22152	25069
Water pressure drop (1) E	kPa	17	24	27	22	26	31	25
Standard pump available pressure head (1)	kPa	148	118	112	110	100	177	175
Heating capacity (3) E	kW	88,3	106	109	125	137	156	173
Power input (3) E	kW	28,1	34,6	35,7	39,0	43,4	49,6	54,9
COP (3) E		3,14	3,07	3,05	3,20	3,15	3,14	3,15
Eurovent Efficiency Class		B	B	B	B	B	B	B
Water flow (3)	l/h	15142	18199	18649	21405	23428	26670	29653
Water pressure drop (3) E	kPa	19	28	29	25	30	38	29
Standard pump available pressure head (3)	kPa	136	105	102	96	84	156	155
Maximum current absorption	A	69	76	78	90	99	111	123
Start up current	A	189	269	237	279	286	329	329
Start up current with softstarter kit	A	168	253	214	257	259	296	296
nr. of compressors / circuits		2\1	2\1	2\1	2\1	2\1	2\1	2\1
Water tank volume	dm^3	200	200	340	340	340	340	340
Expansion vessel	dm^3	12	12	12	12	12	12	12
Sound pressure level (2)	dB(A)	80	83	85	86	86	86	86
Operating weight of base unit	kg	655	735	735	735	1015	1060	1090
Operating weight of unit with pump and full tank	kg	890	971	1112	1112	1392	1440	1470

SCX..HS		174	194	204	192	212	243	214	224
Power supply	V-ph-Hz	400 - 3N - 50							
Cooling capacity (1) E	kW	169	180	187	178	192	220	195	209
Power supply (1) E	kW	61,5	62,7	66,8	61,4	71,3	84,9	72,7	78,4
EER (1) E		2,74	2,88	2,81	2,90	2,70	2,59	2,68	2,67
ESEER E		3,70	3,76	3,99	4,07	3,78	3,49	3,80	3,79
Eurovent Efficiency Class		C	C	C	B	D	D	D	D
Water flow (1)	l/h	29128	31126	32350	30785	33188	37977	33606	36085
Water pressure drop (1) E	kPa	38	43	38	18	33	27	41	39
Standard pump available pressure head (1)	kPa	156	140	130	161	185	174	167	158
Heating capacity (3) E	kW	195	207	215	206	224	260	231	244
Power input (3) E	kW	63,5	65,7	70,7	61,7	70,4	81,8	75,0	78,8
COP (3) E		3,07	3,15	3,05	3,34	3,18	3,18	3,08	3,10
Eurovent Efficiency Class		B	B	B	A	B	B	B	B
Water flow (3)	l/h	34140	36210	37720	35315	38349	44655	40490	42770
Water pressure drop (3) E	kPa	47	53	47	20	38	32	54	50
Standard pump available pressure head (3)	kPa	119	100	87	142	155	158	116	109
Maximum current absorption	A	151	149	159	142	155	194	192	218
Start up current	A	288	290	295	420	431	376	337	344
Start up current with softstarter kit	A	230	231	233	386	389	312	275	279
nr. of compressors / circuits		4\2	4\2	4\2	2\1	2\1	3\1	4\2	4\2
Water tank volume	dm^3	750	750	750	600	600	600	750	750
Expansion vessel	dm^3	24	24	24	24	24	24	24	24
Sound pressure level (2)	dB(A)	84	86	86	88	90	88	87	88
Operating weight of base unit	kg	1445	1465	1465	1400	1400	1465	1515	1515
Operating weight of unit with pump and full tank	kg	2266	2286	2286	2050	2101	2170	2366	2366



Rated technical data of SCX H heat pumps

SCX..HS		244	264	284	304	324	344	364
Power supply	V-ph-Hz	400 - 3N - 50						
Cooling capacity (1) E	kW	222	254	274	290	302	325	336
Power supply (1) E	kW	82,5	97,0	103,7	109,7	117,8	128,6	134,4
EER (1) E		2,73	2,62	2,64	2,64	2,56	2,53	2,50
ESEER E		3,74	3,80	3,45	3,46	3,35	3,51	3,42
Eurovent Efficiency Class		C	D	D	D	D	D	D
Water flow (1)	l/h	38280	43886	47205	50072	52134	56162	58226
Water pressure drop (1) E	kPa	43	29	33	37	31	36	38
Standard pump available pressure head (1)	kPa	150	162	153	144	146	135	129
Heating capacity (3) E	kW	256	293	318	339	352	378	392
Power input (3) E	kW	82,7	99,6	106,7	117,1	118,6	122,7	128,1
COP (3) E		3,09	2,94	2,98	2,90	2,97	3,08	3,06
Eurovent Efficiency Class		B	C	C	C	C	B	B
Water flow (3)	l/h	44760	53570	55740	59430	61800	66340	68770
Water pressure drop (3) E	kPa	55	33	38	43	40	46	49
Standard pump available pressure head (3)	kPa	124	146	133	121	121	107	100
Maximum current absorption	A	192	218	229	241	253	267	306
Start up current	A	351	365	408	416	426	428	526
Start up current with softstarter kit	A	281	285	298	324	327	328	419
nr. of compressors / circuits		4\2	4\2	4\2	4\2	4\2	4\2	4\2
Water tank volume	dm^3	750	750	750	750	750	750	750
Expansion vessel	dm^3	24	24	24	24	24	24	24
Sound pressure level (2)	dB(A)	88	88	89	89	89	91	92
Operating weight of base unit	kg	1625	1625	1945	1980	1980	2015	2015
Operating weight of unit with pump and full tank	kg	2480	2480	2800	2835	2835	2870	2870

(1) Water temperature 12/7°C; outdoor air temperature 35°C (14511:2011)
(2) Sound power level measured according to UNI EN ISO 9614
(3) Water temperature 40/45 °C, outdoor air temperature 7 °C D.B. - 6 °C W.B. (14511:2011)
(E) EUROVENT certified data

Dimensional drawings

SCX 82 - 92

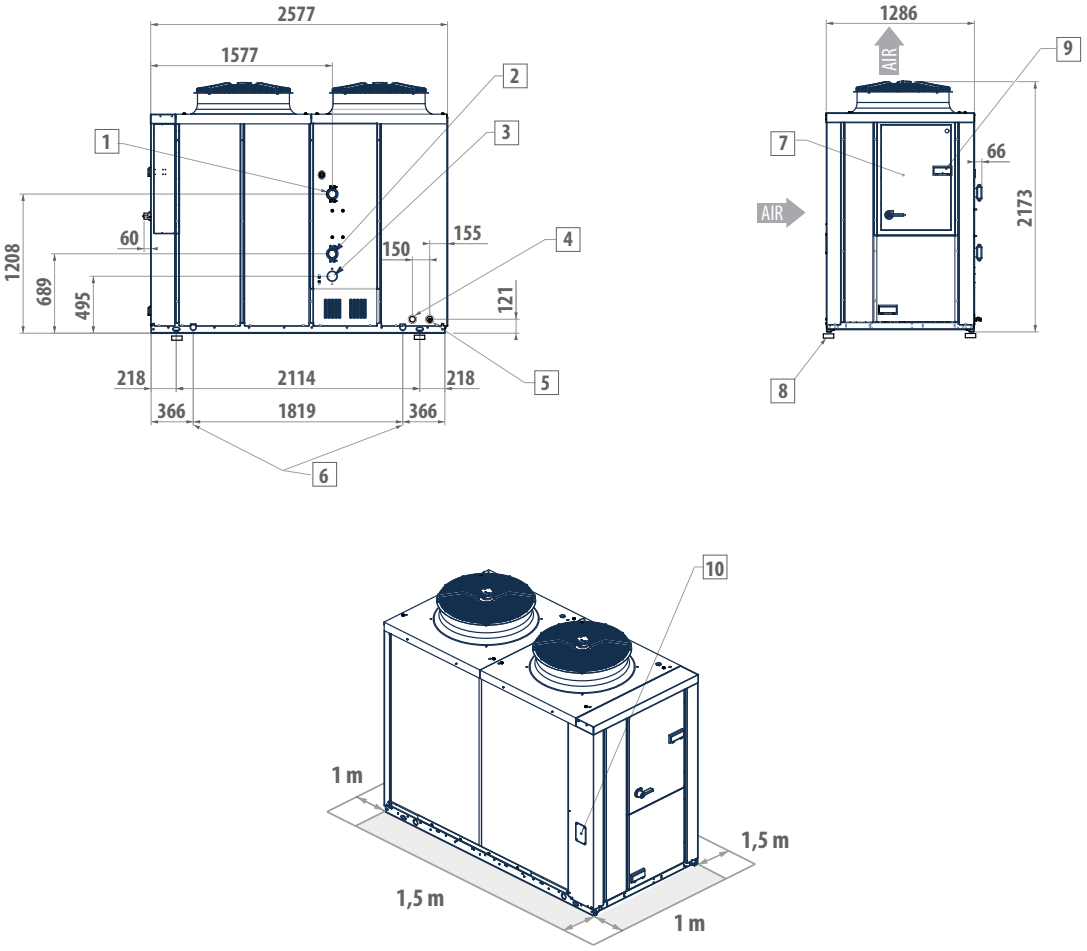

LEGEND	
1	Water inlet (Victaulic 2”)
2	Water outlet, evaporator only (Victaulic 2”)
3	Water outlet (Victaulic 2”)
4	Water filling
5	Water drainage
6	Fastening points
7	Electric control board
8	Vibration dampers
9	User interface
10	Power supply input



Dimensional drawings

SCX 102 - 162

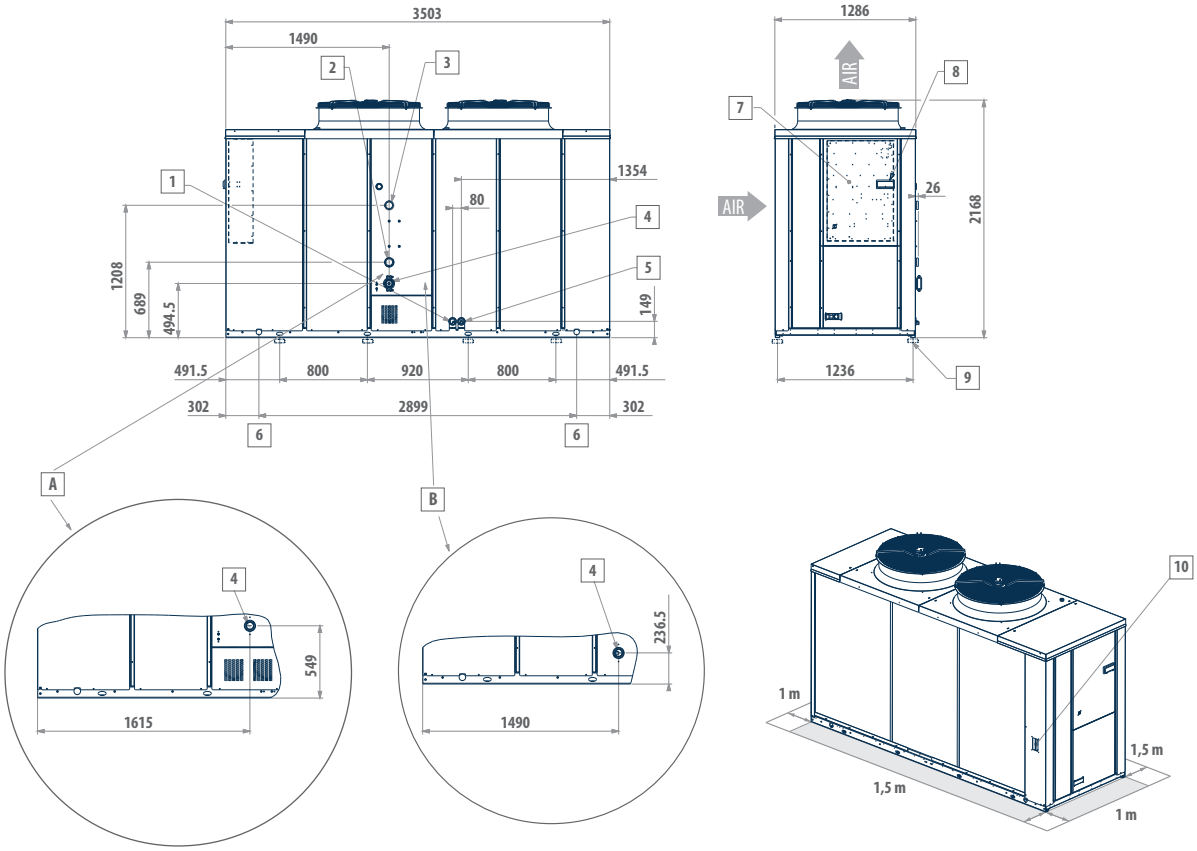

LEGEND	
1	Water filling
2	Water outlet, evaporator only (Victaulic 2"½)
3	Water inlet (Victaulic 2"½)
4	Water outlet (Victaulic 2"½)
5	Water drainage
6	Fastening points
7	Electric control board
8	User interface
9	Vibration dampers
10	Power supply input
A	Version with 2 pumps
B	Version with buffer tank only

Dimensional drawings

SCX 174 - 244

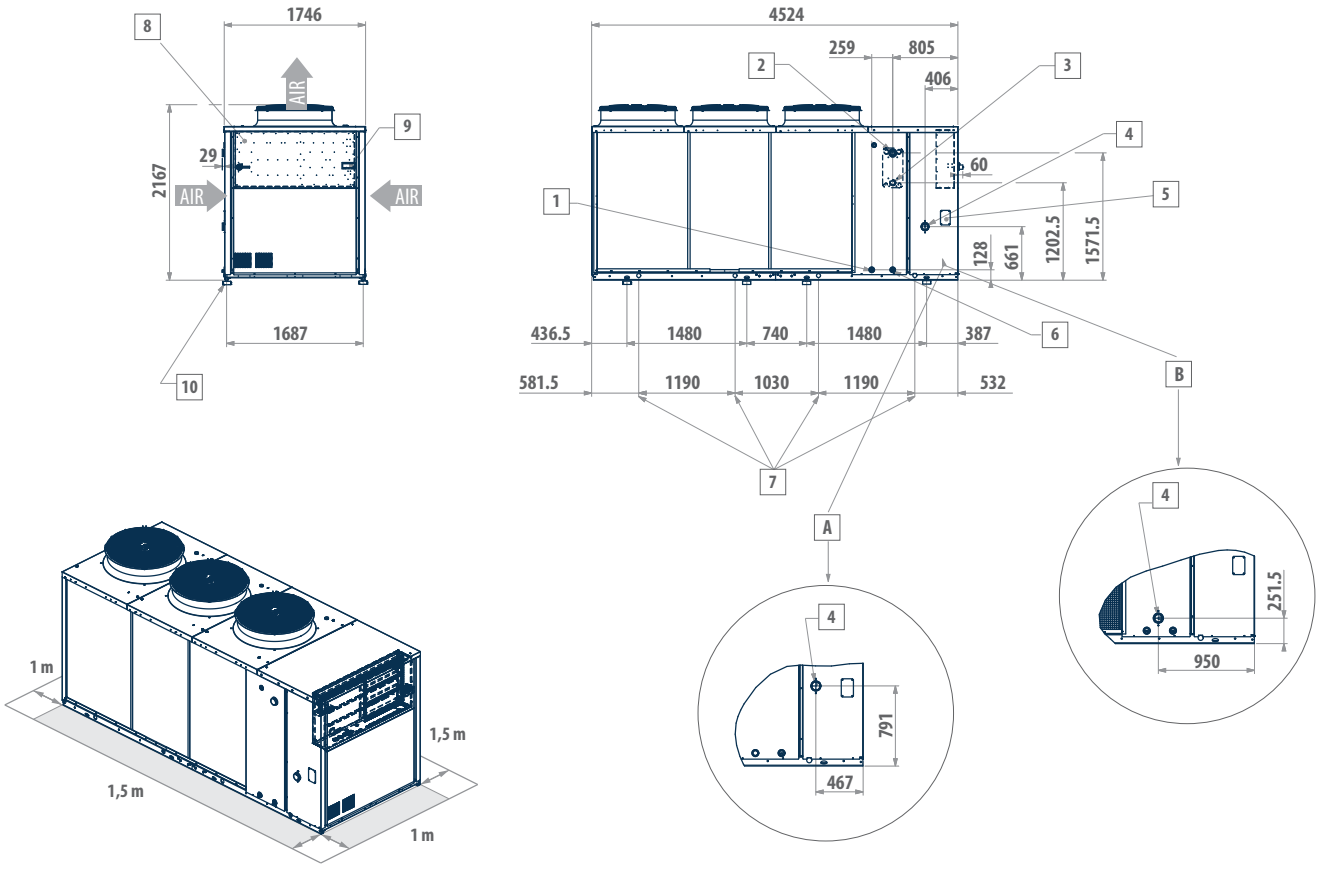

LEGEND	
1	Water drainage
2	Water inlet (Victaulic 3”)
3	Water outlet, evaporator only version (Victaulic 3”)
4	Water outlet (Victaulic 3”)
5	Power supply input
6	Water filling
7	Fastening points
8	Electric control board
9	User interface
10	Vibration dampers
A	Version with 2 pumps
B	Version with buffer tank only



Dimensional drawings

SCX 264 - 364

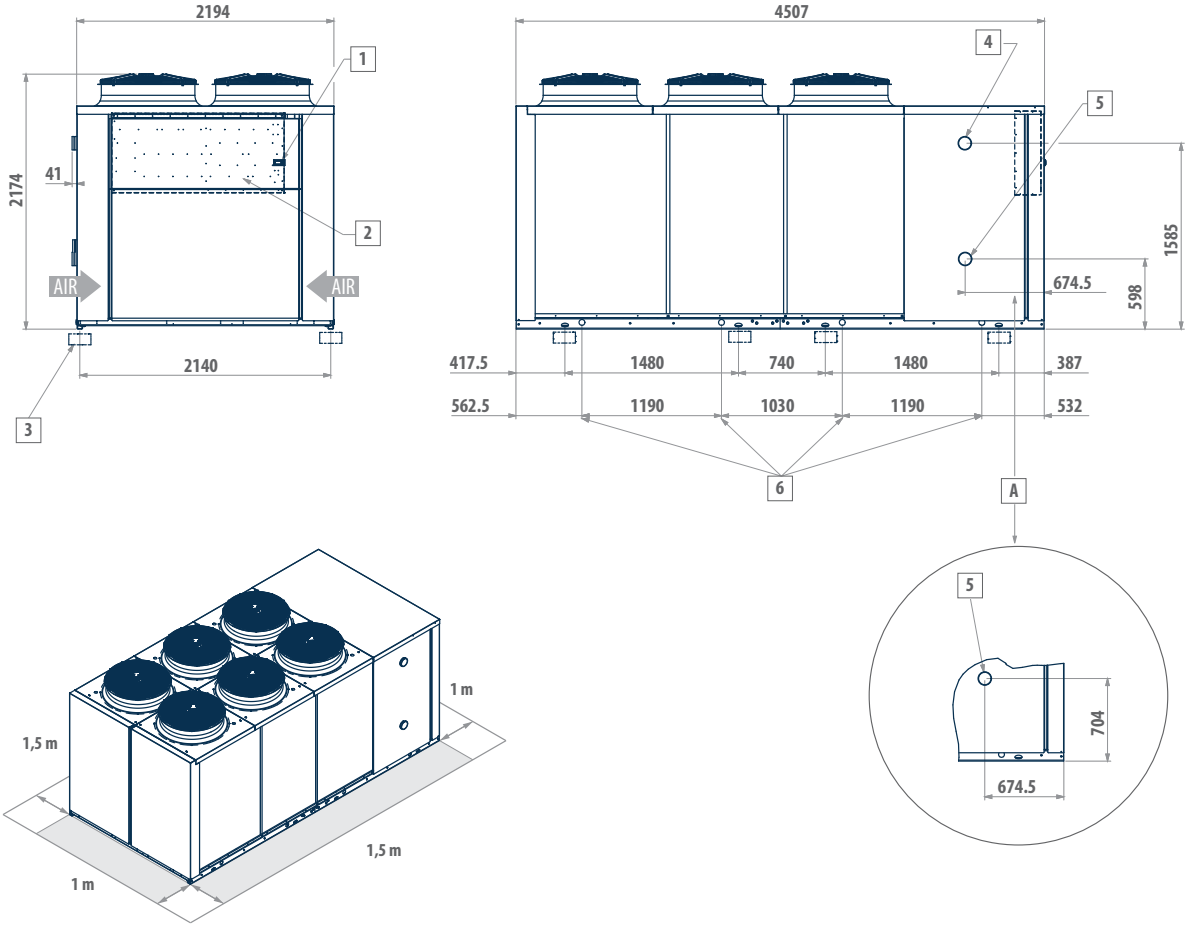

LEGEND	
1	User interface
2	Electric control board
3	Vibration dampers
4	Water inlet (Victaulic 4")
5	Water outlet (Victaulic 4")
6	Fastening points
A	Version with 2 pumps

Outdoor packaged unit

LCX 40 - 360 kW

UP GRADE



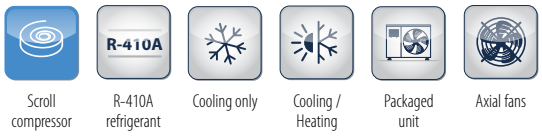

Scroll compressor | R-410A refrigerant | Cooling only | Cooling / Heating | Packaged unit | Axial fans

LCX: wide range of models and configurability

The main feature of the new LCX design is its extremely wide range: the 18 models that comprise it can be built as chiller, free cooling, or heat pump versions, in 3 different acoustic configurations, and cover a range of powers from 40 to 360 kW.
The possibility of setting up different cooling circuits in units of the same power means being able to personalise efficiency levels under full or part load conditions.

- 2 circuits, 2 compressors The dual circuit-dual compressor models provide high efficiency values under full load (EER and COP).
- 1 circuit, 2 compressors The solution of using two compressors in a single cooling circuit increases efficiency under part load conditions, reaching ESEER/ SEER and SCOP values greater than 4.
- 2 circuits, 4 compressors 4 compressors enable the unit to output power in 4 steps and adapt perfectly to the actual thermal load of the system, while reducing starting currents.

Complete hydronic kits can be incorporated within the units without modifying their size and you have the option of choosing the water circulation pump.
All units, irrespective of type of construction, are equipped with electronic expansion valves to maximise efficiency under part load conditions.

PLUS

- Completely configurable range
- Electronic expansion valve
- Incorporable hydronic kits
- Up to 4 compressors
- 1 or 2 cooling circuits
- Remote connectivity with the most common protocols

LCX heat pumps and water chillers are designed for heating or cooling the water to be used in air-conditioning systems for residential, commercial or industrial use.

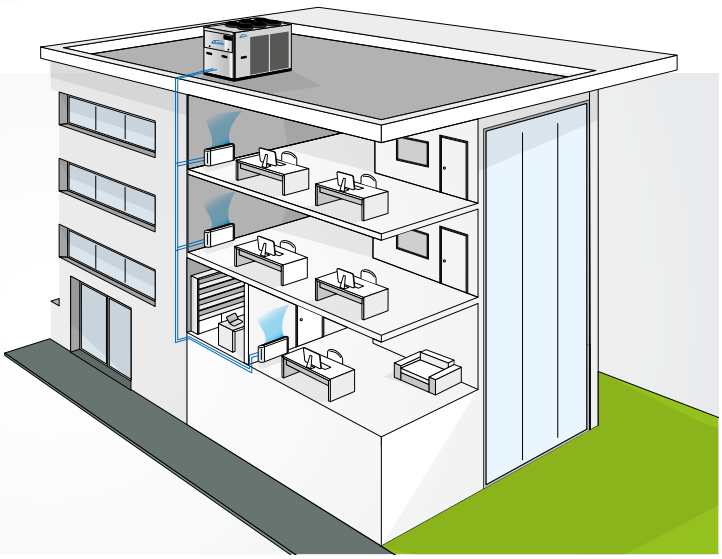



MAIN COMPONENTS

Structure

Made in galvanised steel sheet with a polyester powder coating for outdoors.
The compressor compartment is completely sealed and may be accessed on 3 sides thanks to easy-to-remove panels that greatly simplify maintenance and/or inspection.

Scroll compressors

Scroll compressors are now the best solution in terms of reliability and limiting the sound power emitted. The compressors are supplied complete with motor protection against overheating, overcurrents and excessive outlet gas temperatures.

Heat exchanger

Made of generously sized aluminum fins and copper piping. The special engineering allows defrost cycles to be carried out at maximum speed in the models with heat pump operation, which brings clear benefits in terms of the integrated efficiency of the whole cycle.

Electronic microprocessor controller

It completely manages the unit. The electronic control system allows the setpoint to be adjusted automatically according to the outdoor temperature in order to reduce consumption and broaden the working temperature range. With the advanced microprocessor control it is possible to set up LAN networks for controlling up to 4 units in parallel.

Fan drive assembly

Axial fans with airfoil blades made of plastic-aluminum composite, connected to an electric motor with external rotor. The condensation control system continuously and automatically regulates the fan speed. Electric fans with BLDC motor are available on request.



Cooling circuit

It can be made in three different versions with the same power (Efficiency Pack), using mainly:
- R410A scroll compressors
- braze-welded plate exchangers
- finned block condenser
- electronic expansion valve



CONFIGURATION

The models are completely configurable by selecting the version and the options. To the right is shown an example of configuration.

Version	Fields ▶	1	2	3	4	5	6	7	8	9	10	11	12	13
LCX092HL		0	B	1	S	0	0	S	1	0	0	G	0	V

To verify the compatibility of the options, use the selection software or the price list.

AVAILABLE VERSIONS

Cooling only versions
- **LCX...CS** Standard execution
- **LCX...CL** Low noise execution
- **LCX...CQ** Quiet execution (super low noise)

Versions with reversible heat pump
- **LCX...HS** Standard execution
- **LCX...HL** Low noise execution
- **LCX...HQ** Quiet execution (super low noise)

CONFIGURATION OPTIONS

1 - POWER SUPPLY
- **0** 400/3/50 + N
- **1** 400/3/50 with transformer
- **2** 400/3/50 + N + Circuit breakers
- **3** 400/3/50 with transformer+ Circuit breakers

2 – CONTROL MICROPROCESSOR + THROTTLE VALVE
- **0** BASE control microprocessor + electronic expansion valve
- **B** ADVANCED control microprocessor + electronic expansion valve

3 - WATER PUMP ON USER SIDE
- **0** Absent
- **1** 1 pump and expansion tank
- **2** 1 uprated pump and expansion tank
- **3** 2 pumps for combined operation + expansion tank (only if FIELD 2 = B)
- **4** 2 uprated pumps for combined operation + expansion tank (only if FIELD 2 = B)
- **5** 2 pumps and expansion tank (in time sequence)
- **6** 2 uprated pumps and expansion tank (in time sequence)

4 - BUFFER TANK
- **0** Absent
- **S** Present

5 - PARTIAL HEAT RECOVERY (air flow modulation option is mandatory)
- **0** Absent
- **D** Desuperheater

6 - AIR FLOW MODULATION
- **0** Absent
- **C** Condensation control with fans adjusted by potentiometer
- **E** Condensation control, "EC brushless" electronically controlled fans

7 - ANTIFREEZE KIT
- **0** Absent
- **E** Present, basic unit (heating element only on plate exchangers)
- **P** Present, unit with pump/s and expansion tank
- **S** Present, unit with pump/s, expansion tank and tank

8 - REMOTE COMMUNICATION
- **0** Absent
- **1** RS485 Serial board (Modbus or Carel protocol)
- **2** Lonworks serial board (only if FIELD 2 = B)
- **3** GSM modem kit (only if FIELD 2 = B)
- **4** pCOWEB Ethernet card (SNMP or BACNET protocol) + clock card (only if FIELD 2 = B)
- **5** pCOWEB Ethernet card (SNMP or BACNET protocol) + clock card + supervision software (only if FIELD 2 = B)

9 - HEAT EXCHANGER CONSTRUCTION ON REQUEST
- **0** Standard
- **R** Copper / copper exchangers
- **C** Cataphoresis
- **B** Fins pre-coated with epoxy paint

10 - PACKING (net price)
- **0** Standard
- **1** Wooden crate
- **2** Wooden case

11 - INSULATION
- **0** Absent
- **G** Base rubber vibration dumpers
- **M** Base spring vibration dumpers

12 – REMOTE CONTROLLER
- **0** Absent
- **1** Simplified remote control panel
- **2** Remote display for BASE control microprocessor (only if FIELD 2 = 0)
- **3** Remote display for ADVANCED control microprocessor (only if FIELD 2 = B)

13 – INSTALLING THE UNIT
- **0** Absent
- **V** Pair of quick couplings for water IN-OUT
- **3** Power factor correction capacitors + soft starter
- **4** Low air/water temperature (crankcase heating element)
- **5** Opt 4 + Opt 2

ACCESSORIES

- **A** Power factor correction capacitors
- **B** Soft-starter kit
- **C** Service kit (kit of sensors for quick diagnosis) (only if FIELD 2 = B)
- **D** Clock card (only if FIELD 2 = B)
- **E** ON/OFF status of the compressors
- **F** Remote control for power step limits (only if FIELD 2 = B)
- **G** Configurable digital alarm card (only if FIELD 2 = B
- **H** Outdoor air temperature probe for setpoint compensation (standard in heating mode)
- **I** Pressure gauges
- **L** Regulating filter kit (solenoid and tap on the liquid line)
- **M** Normative reference other than "97/23/CE - PED"
- **N** Unit lifting kit
- **P** Condenser protection grille
- **Q** Metal filters for protecting condenser coil

LCX CS Rated technical data of water chillers

LCX...CS		062	072	082	091	092	101	102
Power supply	V-ph-Hz	400 - 3N - 50						
Cooling capacity (1) (E)	kW	58,2	66,5	78,2	88,6	88,6	102	113
Power supply (1) (E)	kW	21,0	23,6	27,2	31,3	32,2	36,1	36,1
EER (1) (E)		2,78	2,82	2,88	2,83	2,75	2,81	2,81
ESEER (E)		3,67	3,72	3,8	3,29	3,61	3,72	3,37
Eurovent Efficiency Class		C	C	C	C	C	C	C
Water flow (1)	l/h	10046	11477	13492	15284	15284	17517	17517
Water pressure drop (1) (E)	kPa	28	29	31	32	32	32	32
Standard pump available pressure head (1)	kPa	142	138	135	130	130	127	127
Maximum current absorption	A	60	64	75	91	91	101	101
Start up current	A	195	192	200	261	261	269	269
Start up current with softstarter kit	A	120	133	148	199	199	207	207
nr. of compressors / circuits		2 / 1	2 / 1	2 / 1	2 / 2	2 / 1	2 / 2	2 / 1
Water tank volume	dm^3	200	200	200	220	220	220	220
Expansion vessel	dm^3	12	12	12	12	12	12	12
Sound power level (2) (E)	dB(A)	82	82	82	83	83	83	83
Operating weight of base unit	kg	540	570	650	730	730	730	730
Operating weight of unit with pump and full tank	kg	877	907	987	1138	1138	1138	1138

LCX...CS		121	122	124	141	142	144
Power supply	V-ph-Hz	400 - 3N - 50					
Cooling capacity (1) (E)	kW	113	113	119	144	144	143
Power supply (1) (E)	kW	40,5	40,5	42,1	50,9	50,9	50,8
EER (1) (E)		2,79	2,78	2,83	2,83	2,83	2,82
ESEER (E)		3,36	3,68	3,76	3,48	3,63	3,64
Eurovent Efficiency Class		C	C	C	C	C	C
Water flow (1)	l/h	19449	19447	20517	24817	24815	24665
Water pressure drop (1) (E)	kPa	34	34	34	36	36	36
Standard pump available pressure head (1)	kPa	115	115	116	177	176	172
Maximum current absorption	A	119	119	120	131	131	129
Start up current	A	319	319	247	330	330	245
Start up current with softstarter kit	A	254	254	172	265	265	186
nr. of compressors / circuits		2 / 2	2 / 1	4 / 2	2 / 2	2 / 1	4 / 2
Water tank volume	dm^3	340	340	340	340	340	340
Expansion vessel	dm^3	12	12	12	12	12	12
Sound power level (2) (E)	dB(A)	83	83	82	84	84	82
Operating weight of base unit	kg	1010	1010	1050	1055	1055	1070
Operating weight of unit with pump and full tank	kg	1581	1581	1641	1626	1626	1661

(1) Water temperature 12/7°C; outdoor air temperature 35°C (14511:2011)
(2) Sound power level measured according to UNI EN ISO 9614
(E) EUROVENT certified data



LCX CS Rated technical data of water chillers

LCX...CS		161	162	164	174	194	214
Power supply	V-ph-Hz	400 - 3N - 50					
Cooling capacity (1) (E)	kW	160	160	152	162	183	201
Power supply (1) (E)	kW	58,9	58,9	56,4	58,1	65,6	76,4
EER (1) (E)		2,71	2,71	2,70	2,78	2,78	2,63
ESEER (E)		3,49	3,75	3,68	3,71	3,59	3,72
Eurovent Efficiency Class		C	C	C	C	C	D
Water flow (1)	l/h	27525	27525	26192	27841	31473	34669
Water pressure drop (1) (E)	kPa	36	36	36	37	37	38
Standard pump available pressure head (1)	kPa	162	162	162	171	151	163
Maximum current absorption	A	137	144	150	136	155	173
Start up current	A	389	396	266	252	310	330
Start up current with softstarter kit	A	306	306	214	200	248	268
nr. of compressors / circuits		2 / 2	2 / 1	4 / 2	4 / 2	4 / 2	4 / 2
Water tank volume	dm^3	340	340	340	600	600	600
Expansion vessel	dm^3	12	12	12	24	24	24
Sound power level (2) (E)	dB(A)	84	84	82	85	85	86
Operating weight of base unit	kg	1085	1085	1220	1440	1460	1470
Operating weight of unit with pump and full tank	kg	1656	1656	1811	2208	2276	2286

LCX...CS		244	274	294	324	364
Power supply	V-ph-Hz	400 - 3N - 50				
Cooling capacity (1) (E)	kW	245	263	293	327	354
Power supply (1) (E)	kW	95,8	90,5	104	119	138
EER (1) (E)		2,55	2,91	2,81	2,76	2,56
ESEER (E)		3,68	3,71	3,62	3,59	3,54
Eurovent Efficiency Class		D	B	C	C	D
Water flow (1)	l/h	42146	45335	50506	56411	60931
Water pressure drop (1) (E)	kPa	38	39	40	41	41
Standard pump available pressure head (1)	kPa	194	179	166	159	137
Maximum current absorption	A	196	224	237	251	300
Start up current	A	380	403	468	476	497
Start up current with softstarter kit	A	215	338	385	393	360
nr. of compressors / circuits		4 / 2	4 / 2	4 / 2	4 / 2	4 / 2
Water tank volume	dm^3	600	765	765	765	765
Expansion vessel	dm^3	24	24	24	24	24
Sound power level (2) (E)	dB(A)	86	86	86	86	87
Operating weight of base unit	kg	1620	1880	1912	1947	1947
Operating weight of unit with pump and full tank	kg	2469	2894	2926	2961	2961

(1) Water temperature 12/7°C; outdoor air temperature 35°C (14511:2011)
(2) Sound power level measured according to UNI EN ISO 9614
(E) EUROVENT certified data

LCX CL Rated technical data of water chillers

LCX...CL		042	052	062	072	082	091	092
Power supply	V-ph-Hz	400 - 3N - 50						
Cooling capacity (1) (E)	kW	45,2	52,4	58,2	66,6	78,5	88,6	88,6
Power supply (1) (E)	kW	15,7	18,0	20,3	22,9	26,6	30,2	31,1
EER (1) (E)		2,88	2,91	2,86	2,90	2,95	2,93	2,85
ESEER (E)		3,98	4,23	4,02	4,02	4,06	3,61	4,03
Eurovent Efficiency Class		C	B	C	B	B	B	C
Water flow (1)	l/h	7803	9035	10035	11482	13549	15283	15283
Water pressure drop (1) (E)	kPa	26	28	28	29	31	32	32
Standard pump available pressure head (1)	kPa	155	153	142	137	133	129	129
Maximum current absorption	A	41	44	51	55	66	77	77
Start up current	A	159	162	185	183	191	246	246
Start up current with softstarter kit	A	88	101	111	124	139	184	184
nr. of compressors / circuits		2 / 1	2 / 1	2 / 1	2 / 1	2 / 1	2 / 2	2 / 1
Water tank volume	dm^3	200	200	220	220	220	340	340
Expansion vessel	dm^3	12	12	12	12	12	12	12
Sound power level (2) (E)	dB(A)	74	74	77	77	77	78	78
Operating weight of base unit	kg	525	525	630	635	700	905	905
Operating weight of unit with pump and full tank	kg	862	862	982	987	1067	1426	1426

LCX...CL		094	101	102	104	121	122	124
Power supply	V-ph-Hz	400 - 3N - 50						
Cooling capacity (1) (E)	kW	90,3	102	102	105	113	113	116
Power supply (1) (E)	kW	31,5	35,2	35,2	36,0	40,2	40,2	41,0
EER (1) (E)		2,87	2,89	2,89	2,90	2,81	2,81	2,84
ESEER (E)		3,86	3,66	4,09	3,95	3,43	3,75	3,64
Eurovent Efficiency Class		C	C	C	B	C	C	C
Water flow (1)	l/h	15574	17539	17539	18027	19478	19478	20075
Water pressure drop (1) (E)	kPa	32	32	32	34	34	34	34
Standard pump available pressure head (1)	kPa	129	127	127	127	115	115	114
Maximum current absorption	A	81	86	86	87	95	95	96
Start up current	A	194	254	254	198	295	295	220
Start up current with softstarter kit	A	126	192	192	129	221	221	146
nr. of compressors / circuits		4 / 2	2 / 2	2 / 1	4 / 2	2 / 2	2 / 1	4 / 2
Water tank volume	dm^3	340	340	340	340	600	600	600
Expansion vessel	dm^3	12	12	12	12	24	24	24
Sound power level (2) (E)	dB(A)	77	78	78	77	80	80	77
Operating weight of base unit	kg	980	915	915	980	1260	1260	1275
Operating weight of unit with pump and full tank	kg	1557	1436	1436	1557	2040	2040	2055

(1) Water temperature 12/7°C; outdoor air temperature 35°C (14511:2011)
(2) Sound power level measured according to UNI EN ISO 9614
(E) EUROVENT certified data



LCX CL Rated technical data of water chillers

LCX...CL		141	142	144	161	162	164	194
Power supply	V-ph-Hz	400 - 3N - 50						
Cooling capacity (1) (E)	kW	127	127	133	160	160	152	177
Power supply (1) (E)	kW	46,7	46,7	46,5	58,5	58,5	56,1	63,6
EER (1) (E)		2,73	2,73	2,86	2,74	2,74	2,71	2,79
ESEER (E)		3,47	3,76	3,91	3,59	3,81	3,71	3,54
Eurovent Efficiency Class		C	C	C	C	C	C	C
Water flow (1)	l/h	21967	21965	22949	27595	27601	26210	30574
Water pressure drop (1) (E)	kPa	36	36	36	37	37	37	37
Standard pump available pressure head (1)	kPa	170	170	168	162	162	162	155
Maximum current absorption	A	106	106	105	120	120	126	148
Start up current	A	306	306	222	371	371	241	307
Start up current with softstarter kit	A	231	231	163	276	279	189	245
nr. of compressors / circuits		2 / 2	2 / 1	4 / 2	2 / 2	2 / 1	4 / 2	4 / 2
Water tank volume	dm^3	600	600	600	600	600	600	600
Expansion vessel	dm^3	24	24	24	24	24	24	24
Sound power level (2) (E)	dB(A)	81	81	77	81	81	77	82
Operating weight of base unit	kg	1310	1310	1290	1330	1330	1440	1460
Operating weight of unit with pump and full tank	kg	2090	2090	2070	2110	2110	2220	2276

LCX...CL		214	244	274	294	324	364
Power supply	V-ph-Hz	400 - 3N - 50					
Cooling capacity (1) (E)	kW	197	219	255	278	315	337
Power supply (1) (E)	kW	74,2	83,9	90,0	107	122	150
EER (1) (E)		2,65	2,61	2,84	2,59	2,58	2,25
ESEER (E)		3,69	3,61	3,50	3,54	3,56	3,49
Eurovent Efficiency Class		D	D	C	D	D	F
Water flow (1)	l/h	33918	37691	44001	47825	54326	58016
Water pressure drop (1) (E)	kPa	37	38	38	39	40	41
Standard pump available pressure head (1)	kPa	160	190	181	168	163	142
Maximum current absorption	A	167	190	215	229	242	300
Start up current	A	318	382	398	494	472	497
Start up current with softstarter kit	A	256	217	333	381	389	352
nr. of compressors / circuits		4 / 2	4 / 2	4 / 2	4 / 2	4 / 2	4 / 2
Water tank volume	dm^3	600	600	765	765	765	765
Expansion vessel	dm^3	24	24	24	24	24	24
Sound power level (2) (E)	dB(A)	82	82	84	84	84	85
Operating weight of base unit	kg	1510	1620	1880	1912	1947	1947
Operating weight of unit with pump and full tank	kg	2326	2469	2894	2926	2961	2961

(1) Water temperature 12/7°C; outdoor air temperature 35°C (14511:2011)
(2) Sound power level measured according to UNI EN ISO 9614
(E) EUROVENT certified data

LCX CQ Rated technical data of water chillers

LCX...CQ		042	052	062	072	082	091	092
Power supply	V-ph-Hz	400-3N-50						
Cooling capacity (1) (E)	kW	43,2	50,0	55,6	63,5	75,0	84,7	84,7
Power supply (1) (E)	kW	15,6	17,9	20,2	22,9	26,5	31,0	31,0
EER (1) (E)		2,76	2,79	2,76	2,78	2,83	2,73	2,73
ESEER (E)		3,85	4,08	3,90	3,90	3,93	3,49	3,91
Eurovent Efficiency Class		C	C	C	C	C	C	C
Water flow (1)	l/h	7452	8627	9601	10963	12934	14610	14610
Water pressure drop (1) (E)	kPa	26	28	28	29	31	32	32
Standard pump available pressure head (1)	kPa	154	152	140	136	133	128	128
Maximum current absorption	A	41	44	51	55	66	77	77
Start up current	A	159	162	185	183	191	246	246
Start up current with softstarter kit	A	88	101	111	124	139	184	184
nr. of compressors / circuits		2 / 1	2 / 1	2 / 1	2 / 1	2 / 1	2 / 2	2 / 1
Water tank volume	dm^3	200	200	220	220	220	340	340
Expansion vessel	dm^3	12	12	12	12	12	12	12
Sound power level (2) (E)	dB(A)	71	71	73	73	73	75	75
Operating weight of base unit	kg	525	525	630	635	700	905	905
Operating weight of unit with pump and full tank	kg	862	862	982	987	1067	1426	1426

LCX...CQ		094	101	102	104	121	122	124
Power supply	V-ph-Hz	400 - 3N - 50						
Cooling capacity (1) (E)	kW	86,4	97,1	97,1	100	107	107	110
Power supply (1) (E)	kW	31,3	35,1	35,1	35,8	40,1	40,1	41,1
EER (1) (E)		2,76	2,76	2,76	2,79	2,66	2,66	2,67
ESEER (E)		3,74	3,53	3,95	3,82	3,26	3,56	3,46
Eurovent Efficiency Class		C	C	C	C	D	D	D
Water flow (1)	l/h	14910	16742	16742	18250	18383	18398	18886
Water pressure drop (1) (E)	kPa	32	32	32	32	95	33	33
Standard pump available pressure head (1)	kPa	127	125	125	128	295	114	114
Maximum current absorption	A	81	86	86	87	221	95	96
Start up current	A	194	254	254	198	198	295	220
Start up current with softstarter kit	A	126	192	192	129	221	221	150
nr. of compressors / circuits		4 / 2	2 / 2	2 / 1	4 / 2	2 / 2	2 / 1	4 / 2
Water tank volume	dm^3	340	340	340	340	600	600	600
Expansion vessel	dm^3	12	12	12	12	33	24	24
Sound power level (2) (E)	dB(A)	74	75	75	74	114	76	76
Operating weight of base unit	kg	980	915	915	980	600	1260	1275
Operating weight of unit with pump and full tank	kg	1557	1436	1436	1557	2040	2040	2055

(1) Water temperature 12/7°C; outdoor air temperature 35°C (14511:2011)
(2) Sound power level measured according to UNI EN ISO 9614
(E) EUROVENT certified data



LCX CQ Rated technical data of water chillers

LCX...CQ		141	142	144	161	162	164
Power supply	V-ph-Hz	400-3N-50					
Cooling capacity (1) (E)	kW	120	120	124	150	150	138
Power supply (1) (E)	kW	46,6	46,5	46,4	58,4	58,4	55,9
EER (1) (E)		2,58	2,58	2,67	2,57	2,57	2,47
ESEER (E)		3,30	3,57	3,71	3,41	3,62	3,53
Eurovent Efficiency Class		D	D	D	D	D	E
Water flow (1)	l/h	20730	20730	21337	25875	25876	23812
Water pressure drop (1) (E)	kPa	35	35	35	35	35	36
Standard pump available pressure head (1)	kPa	170	170	169	166	166	163
Maximum current absorption	A	106	106	105	120	120	126
Start up current	A	306	306	222	317	317	241
Start up current with softstarter kit	A	231	231	168	276	279	195
nr. of compressors / circuits		2 / 2	2 / 1	4 / 2	2 / 2	2 / 1	4 / 2
Water tank volume	dm^3	600	600	600	600	600	600
Expansion vessel	dm^3	24	24	24	24	24	24
Sound power level (2) (E)	dB(A)	77	77	73	77	77	73
Operating weight of base unit	kg	1310	1310	1290	1330	1330	1440
Operating weight of unit with pump and full tank	kg	2090	2090	2070	2110	2110	2220

LCX...CQ		194	214	244	274	294	324
Power supply	V-ph-Hz	400-3N-50					
Cooling capacity (1) (E)	kW	160	178	196	241	261	283
Power supply (1) (E)	kW	69,9	79,4	87,1	89,9	108	122
EER (1) (E)		2,29	2,24	2,25	2,68	2,43	2,32
ESEER (E)		3,36	3,51	3,43	3,32	3,37	3,38
Eurovent Efficiency Class		F	F	F	D	E	E
Water flow (1)	l/h	27594	30652	33747	41455	45007	48740
Water pressure drop (1) (E)	kPa	35	35	36	37	38	38
Standard pump available pressure head (1)	kPa	173	181	200	181	172	168
Maximum current absorption	A	148	167	190	215	229	242
Start up current	A	307	318	382	398	494	472
Start up current with softstarter kit	A	252	266	330	331	382	392
nr. of compressors / circuits		4 / 2	4 / 2	4 / 2	4 / 2	4 / 2	4 / 2
Water tank volume	dm^3	600	600	600	765	765	765
Expansion vessel	dm^3	24	24	24	24	24	24
Sound power level (2) (E)	dB(A)	78	78	78	80	80	80
Operating weight of base unit	kg	1460	1510	1620	1880	1912	1947
Operating weight of unit with pump and full tank	kg	2276	2326	2469	2894	2926	2961

(1) Water temperature 12/7°C; outdoor air temperature 35°C (14511:2011)
(2) Sound power level measured according to UNI EN ISO 9614
(E) EUROVENT certified data

LCX HS Rated technical data of heat pumps

LCX…HS		062	072	082	091	092	101	102
Power supply	V-ph-Hz	400 - 3N - 50						
Cooling capacity (1) (E)	kW	57,4	65,6	77,1	87,4	87,4	100,1	100,1
Power supply (1) (E)	kW	20,9	23,6	27,1	32,1	32,1	36,4	36,4
EER (1) (E)		2,74	2,78	2,85	2,72	2,72	2,75	2,75
ESEER (E)		3,60	3,64	3,72	3,23	3,54	3,65	3,30
Eurovent Efficiency Class		C	C	C	C	C	C	C
Water flow (1)	l/h	9895	11303	13293	15063	15062	17262	17263
Water pressure drop (1) (E)	kPa	23	23	23	24	24	26	26
Standard pump available pressure head (1)	kPa	148	145	142	138	138	133	133
Heating capacity (3) (E)	kW	69,5	79,2	93,5	105	107	120	120
Power input (3) (E)	kW	19,8	22,1	25,7	30,0	30,0	34,2	34,2
COP (3) (E)		3,51	3,58	3,64	3,51	3,55	3,52	3,52
Eurovent Efficiency Class		A	A	A	A	A	A	A
Water flow (3)	l/h	12200	13480	14800	17590	17815	20375	20570
Water pressure drop (3) (E)	kPa	57	43	52	38	38	51	51
Standard pump available pressure head (3)	kPa	110	118	100	118	118	100	101
Maximum current absorption	A	60	64	75	91	91	101	101
Start up current	A	195	192	200	261	261	269	269
Start up current with softstarter kit	A	120	133	148	199	199	207	207
nr. of compressors / circuits		2 / 1	2 / 1	2 / 1	2 / 2	2 / 1	2 / 2	2 / 1
Water tank volume	dm^3	200	200	200	220	220	220	220
Expansion vessel	dm^3	12	12	12	12	12	12	12
Sound power level (2) (E)	dB(A)	82	82	82	83	83	83	83
Operating weight of base unit	kg	540	570	650	730	730	730	730
Operating weight of unit with pump and full tank	kg	877	907	987	1138	1138	1138	1138

LCX…HS		121	122	124	141	142	144
Power supply	V-ph-Hz	400 - 3 - 50					
Cooling capacity (1) (E)	kW	111	111	117	142	142	141
Power supply (1) (E)	kW	40,4	40,4	42,0	50,8	50,9	50,7
EER (1) (E)		2,75	2,75	2,80	2,79	2,79	2,78
ESEER (E)		3,29	3,61	3,69	3,41	3,55	3,56
Eurovent Efficiency Class		C	C	C	C	C	C
Water flow (1)	l/h	19162	19159	20214	24449	24448	24301
Water pressure drop (1) (E)	kPa	25	27	25	29	31	31
Standard pump available pressure head (1)	kPa	124	124	124	181	180	176
Heating capacity (3) (E)	kW	134	134	147	166	167	168
Power input (3) (E)	kW	38,1	38,1	41,7	47,6	47,7	47,3
COP (3) (E)		3,52	3,50	3,52	3,49	3,49	3,55
Eurovent Efficiency Class		A	A	A	A	A	A
Water flow (3)	l/h	23950	24030	23460	26490	26610	25940
Water pressure drop (3) (E)	kPa	49	49	47	61	60	58
Standard pump available pressure head (3)	kPa	98	99	93	136	138	126
Maximum current absorption	A	119	119	120	131	131	129
Start up current	A	319	319	247	330	330	245
Start up current with softstarter kit	A	254	254	172	265	265	186
nr. of compressors / circuits		2 / 2	2 / 1	4 / 2	2 / 2	2 / 1	4 / 2
Water tank volume	dm^3	340	340	340	340	340	340
Expansion vessel	dm^3	12	12	12	12	12	12
Sound power level (2) (E)	dB(A)	82	83	82	84	84	82
Operating weight of base unit	kg	1010	1010	1050	1055	1055	1070
Operating weight of unit with pump and full tank	kg	1581	1581	1641	1626	1626	1661

(1) Water temperature 12/7°C; outdoor air temperature 35°C (14511:2011)
(2) Sound power level measured according to UNI EN ISO 9614
(3) Water temperature 40/45 °C, outdoor air temperature 7 °C D.B. - 6 °C W.B. (14511:2011)
(E) EUROVENT certified data



LCX HS Rated technical data of heat pumps

LCX…HS		161	162	164	174	194	214
Power supply	V-ph-Hz	400 - 3N - 50					
Cooling capacity (1) (E)	kW	157	157	150	159	180	198
Power supply (1) (E)	kW	58,8	58,8	56,3	58,1	65,6	76,3
EER (1) (E)		2,67	2,67	2,66	2,74	2,74	2,60
ESEER (E)		3,42	3,68	3,60	3,64	3,52	3,64
Eurovent Efficiency Class		D	D	D	C	C	D
Water flow (1)	l/h	27118	27118	25805	27429	31007	34156
Water pressure drop (1) (E)	kPa	32	32	32	33	34	35
Standard pump available pressure head (1)	kPa	165	165	166	173	153	165
Heating capacity (3) (E)	kW	185	185	179	189	214	233
Power input (3) (E)	kW	53,1	53,1	50,7	56,9	64,6	71,0
COP (3) (E)		3,48	3,48	3,54	3,32	3,32	3,28
Eurovent Efficiency Class		A	A	A	A	A	A
Water flow (3)	l/h	31250	31290	30530	32675	36820	40980
Water pressure drop (3) (E)	kPa	38	57	56	63	65	64
Standard pump available pressure head (3)	kPa	118	119	124	134	102	110
Maximum current absorption	A	137	144	150	136	155	173
Start up current	A	389	396	266	252	310	330
Start up current with softstarter kit	A	306	306	214	200	248	268
nr. of compressors / circuits		2 / 2	2 / 1	4 / 2	4 / 2	4 / 2	4 / 2
Water tank volume	dm^3	340	340	340	600	600	600
Expansion vessel	dm^3	12	12	12	24	24	24
Sound power level (2) (E)	dB(A)	84	84	82	85	85	86
Operating weight of base unit	kg	1085	1085	1220	1440	1460	1470
Operating weight of unit with pump and full tank	kg	1656	1656	1811	2208	2276	2286

LCX…HS		244	274	294	324	364
Power supply	V-ph-Hz	400 - 3N - 50				
Cooling capacity (1) (E)	kW	241	259	289	323	349
Power supply (1) (E)	kW	95,7	90,4	104	119	138
EER (1) (E)		2,52	2,87	2,77	2,72	2,53
ESEER (E)		3,61	3,63	3,55	3,52	3,47
Eurovent Efficiency Class		D	C	C	C	D
Water flow (1)	l/h	41524	44665	49760	55581	60030
Water pressure drop (1) (E)	kPa	35	35	35	37	35
Standard pump available pressure head (1)	kPa	196	182	170	161	142
Heating capacity (3) (E)	kW	282	309	343	374	419
Power input (3) (E)	kW	85,6	88,7	99,5	110	128
COP (3) (E)		3,29	3,49	3,44	3,39	3,27
Eurovent Efficiency Class		A	A	A	A	A
Water flow (3)	l/h	47535	53300	57430	61030	74000
Water pressure drop (3) (E)	kPa	70	53	61	69	58
Standard pump available pressure head (3)	kPa	146	149	122	96	76
Maximum current absorption	A	196	224	237	251	300
Start up current	A	380	403	468	476	497
Start up current with softstarter kit	A	215	338	385	393	360
nr. of compressors / circuits		4 / 2	4 / 2	4 / 2	4 / 2	4 / 2
Water tank volume	dm^3	600	765	765	765	765
Expansion vessel	dm^3	24	24	24	24	24
Sound power level (2) (E)	dB(A)	86	86	86	86	87
Operating weight of base unit	kg	1620	1880	1912	1947	1947
Operating weight of unit with pump and full tank	kg	2469	2894	2926	2961	2961

(1) Water temperature 12/7°C; outdoor air temperature 35°C (14511:2011)
(2) Sound power level measured according to UNI EN ISO 9614
(3) Water temperature 40/45 °C, outdoor air temperature 7 °C D.B. - 6 °C W.B. (14511:2011)
(E) EUROVENT certified data

LCX HL Rated technical data of heat pumps

LCX…HL		042	052	062	072	082	091	092
Power supply	V-ph-Hz	400-3N-50						
Cooling capacity (1) (E)	kW	44,6	51,6	57,3	65,6	77,4	87,3	87,3
Power supply (1) (E)	kW	15,7	18,0	20,3	22,9	26,5	30,1	31,0
EER (1) (E)		2,84	2,87	2,83	2,86	2,92	2,90	2,82
ESEER (E)		3,90	4,14	3,94	3,94	3,98	3,54	3,95
Eurovent Efficiency Class		C	C	C	C	B	B	C
Water flow (1)	l/h	7688	8901	9887	11311	13349	15057	15057
Water pressure drop (1) (E)	kPa	22	25	25	25	26	25	25
Standard pump available pressure head (1)	kPa	159	156	145	141	138	136	136
Heating capacity (3) (E)	kW	52,5	59,9	66,7	76,1	88,0	103	103
Power input (3) (E)	kW	14,7	17,0	19,1	21,4	24,9	28,7	28,7
COP (3) (E)		3,56	3,53	3,50	3,56	3,53	3,59	3,59
Eurovent Efficiency Class		A	A	A	A	A	A	A
Water flow (3)	l/h	9265	10530	12290	13635	15000	18200	18160
Water pressure drop (3) (E)	kPa	34	43	57	43	52	40	38
Standard pump available pressure head (3)	kPa	143	132	110	117	99	116	118
Maximum current absorption	A	41	44	51	55	66	77	77
Start up current	A	159	162	185	183	191	246	246
Start up current with softstarter kit	A	88	101	111	124	139	184	184
nr. of compressors / circuits		2 / 1	2 / 1	2 / 1	2 / 1	2 / 1	2 / 2	2 / 1
Water tank volume	dm^3	200	200	220	220	220	340	340
Expansion vessel	dm^3	12	12	12	12	12	12	12
Sound power level (2) (E)	dB(A)	74	74	77	77	77	78	78
Operating weight of base unit	kg	525	525	630	635	700	905	905
Operating weight of unit with pump and full tank	kg	862	862	982	987	1067	1426	1426

LCX…HL		094	101	102	104	121	122	124
Power supply	V-ph-Hz	400-3N-50						
Cooling capacity (1) (E)	kW	89,0	100	100	103	112	112	115
Power supply (1) (E)	kW	31,4	35,1	35,1	36,0	40,8	40,6	41,1
EER (1) (E)		2,84	2,85	2,85	2,87	2,74	2,75	2,80
ESEER (E)		3,78	3,59	4,00	3,87	3,36	3,67	3,57
Eurovent Efficiency Class		C	C	C	C	C	C	C
Water flow (1)	l/h	15344	17280	17280	17761	19234	19227	19829
Water pressure drop (1) (E)	kPa	25	29	29	29	27	27	27
Standard pump available pressure head (1)	kPa	135	129	129	132	122	122	121
Heating capacity (3) (E)	kW	105	114	113	118	135	135	139
Power input (3) (E)	kW	29,5	32,3	32,3	33,8	38,4	38,1	39,4
COP (3) (E)		3,56	3,52	3,50	3,49	3,53	3,55	3,53
Eurovent Efficiency Class		A	A	A	A	A	A	A
Water flow (3)	l/h	17850	20510	20400	20080	24260	24200	23770
Water pressure drop (3) (E)	kPa	39	51	51	50	50	49	48
Standard pump available pressure head (3)	kPa	112	98	98	98	97	98	91
Maximum current absorption	A	81	86	86	87	95	95	96
Start up current	A	194	254	254	198	295	295	220
Start up current with softstarter kit	A	126	192	192	129	221	221	146
nr. of compressors / circuits		4 / 2	2 / 2	2 / 1	4 / 2	2 / 2	2 / 1	4 / 2
Water tank volume	dm^3	340	340	340	340	600	600	600
Expansion vessel	dm^3	12	12	12	12	24	24	24
Sound power level (2) (E)	dB(A)	77	78	78	77	80	80	77
Operating weight of base unit	kg	980	915	915	980	1260	1260	1275
Operating weight of unit with pump and full tank	kg	1557	1436	1436	1557	2040	2040	2055

(1) Water temperature 12/7°C; outdoor air temperature 35°C (14511:2011)
(2) Sound power level measured according to UNI EN ISO 9614
(3) Water temperature 40/45 °C, outdoor air temperature 7 °C D.B. - 6 °C W.B. (14511:2011)
(E) EUROVENT certified data



LCX HL Rated technical data of heat pumps

LCX…HL		141	142	144	161	162	164
Power supply	V-ph-Hz	400-3N-50					
Cooling capacity (1) (E)	kW	126	126	132	158	158	150
Power supply (1) (E)	kW	46,7	46,6	46,6	59,2	59,2	56,1
EER (1) (E)		2,70	2,70	2,84	2,67	2,67	2,67
ESEER (E)		3,40	3,68	3,83	3,52	3,74	3,64
Eurovent Efficiency Class		C	C	C	D	D	D
Water flow (1)	l/h	21723	21737	22790	27297	27297	25863
Water pressure drop (1) (E)	kPa	29	29	29	34	34	32
Standard pump available pressure head (1)	kPa	177	177	174	163	163	165
Heating capacity (3) (E)	kW	148	148	155	183	183	174
Power input (3) (E)	kW	44,7	44,7	43,4	52,7	52,7	50,5
COP (3) (E)		3,30	3,30	3,56	3,47	3,47	3,45
Eurovent Efficiency Class		A	A	A	A	A	A
Water flow (3)	l/h	26990	26610	26450	31090	30950	30375
Water pressure drop (3) (E)	kPa	63	61	61	58	57	55
Standard pump available pressure head (3)	kPa	139	141	131	118	118	124
Maximum current absorption	A	106	106	105	120	120	126
Start up current	A	306	306	222	371	371	241
Start up current with softstarter kit	A	231	231	163	276	279	189
nr. of compressors / circuits		2 / 2	2 / 1	4 / 2	2 / 2	2 / 1	4 / 2
Water tank volume	dm^3	600	600	600	600	600	600
Expansion vessel	dm^3	24	24	24	24	24	24
Sound power level (2) (E)	dB(A)	81	81	77	81	81	77
Operating weight of base unit	kg	1310	1310	1290	1330	1330	1440
Operating weight of unit with pump and full tank	kg	2090	2090	2070	2110	2110	2220

LCX…HL		194	214	244	274	294	324
Power supply	V-ph-Hz	400 - 3N - 50					
Cooling capacity (1) (E)	kW	176	194	216	252	274	311
Power supply (1) (E)	kW	63,6	74,9	84,2	90,2	108	123
EER (1) (E)		2,77	2,59	2,57	2,80	2,54	2,54
ESEER (E)		3,47	3,62	3,54	3,43	3,47	3,48
Eurovent Efficiency Class		C	D	D	C	D	D
Water flow (1)	l/h	30320	33492	37260	43482	47226	53617
Water pressure drop (1) (E)	kPa	33	34	33	36	34	37
Standard pump available pressure head (1)	kPa	158	163	195	182	172	165
Heating capacity (3) (E)	kW	206	233	263	295	329	364
Power input (3) (E)	kW	59,9	66,8	76,8	85,6	96,8	109
COP (3) (E)		3,44	3,49	3,42	3,45	3,40	3,36
Eurovent Efficiency Class		A	A	A	A	A	A
Water flow (3)	l/h	36650	40630	46840	52960	56740	60340
Water pressure drop (3) (E)	kPa	65	64	70	53	61	69
Standard pump available pressure head (3)	kPa	104	99	145	150	122	96
Maximum current absorption	A	148	167	190	215	229	242
Start up current	A	307	318	382	398	464	472
Start up current with softstarter kit	A	245	256	217	333	381	389
nr. of compressors / circuits	A	4 / 2	4 / 2	4 / 2	4 / 2	4 / 2	4 / 2
Water tank volume	dm^3	600	600	600	600	600	600
Expansion vessel	dm^3	24	24	24	24	24	24
Sound power level (2) (E)	dB(A)	82	82	82	84	84	85
Operating weight of base unit	kg	1460	1510	1620	1880	1912	1947
Operating weight of unit with pump and full tank	kg	2276	2326	2469	2894	2926	2961

(1) Water temperature 12/7°C; outdoor air temperature 35°C (14511:2011)
(2) Sound power level measured according to UNI EN ISO 9614
(3) Water temperature 40/45 °C, outdoor air temperature 7 °C D.B. - 6 °C W.B. (14511:2011)
(E) EUROVENT certified data

LCX HQ Rated technical data of water chillers

LCX...HQ		042	052	062	072	082	091	092
Power supply	V-ph-Hz	400-3N-50						
Cooling capacity (1) (E)	kW	42,8	49,5	55,1	62,9	74,2	83,9	83,9
Power supply (1) (E)	kW	15,6	17,9	20,2	22,9	26,5	30,0	30,8
EER (1) (E)		2,75	2,77	2,73	2,75	2,81	2,80	2,72
ESEER (E)		3,90	4,14	3,94	3,94	3,98	3,54	3,95
Eurovent Efficiency Class		C	C	C	C	C	C	C
Water flow (1)	l/h	7688	8901	9887	11311	13349	15057	15057
Water pressure drop (1) (E)	kPa	22	25	25	25	26	25	25
Standard pump available pressure head (1)	kPa	159	156	145	141	138	136	136
Heating capacity (3) (E)	kW	50,7	57,8	64,3	73,7	85,4	98,8	99,6
Power input (3) (E)	kW	14,7	16,9	19,0	21,3	24,8	27,7	28,5
COP (3) (E)		3,45	3,43	3,39	3,46	3,44	3,57	3,50
Eurovent Efficiency Class		A	A	A	A	A	A	A
Water flow (3)	l/h	8760	10000	11120	12740	14770	17100	17234
Water pressure drop (3) (E)	kPa	30	33	33	33	33	33	33
Standard pump available pressure head (3)	kPa	144	138	127	122	117	119	119
Maximum current absorption	A	41	44	51	55	66	77	77
Start up current	A	159	162	185	183	191	246	246
Start up current with softstarter kit	A	88	101	111	124	139	184	184
nr. of compressors / circuits		2 / 1	2 / 1	2 / 1	2 / 1	2 / 1	2 / 2	2 / 1
Water tank volume	dm^3	200	200	220	220	220	340	340
Expansion vessel	dm^3	12	12	12	12	12	12	12
Sound power level (2) (E)	dB(A)	71	71	73	73	73	75	75
Operating weight of base unit	kg	525	525	630	635	700	905	905
Operating weight of unit with pump and full tank	kg	862	862	982	987	1067	1426	1426

LCX...HQ		094	101	102	104	121	122	124
Power supply	V-ph-Hz	400 - 3N - 50						
Cooling capacity (1) (E)	kW	85,6	96,1	96,1	99,0	106	106	109
Power supply (1) (E)	kW	31,2	35,1	35,1	35,8	40,0	40,0	41,0
EER (1) (E)		2,74	2,74	2,74	2,76	2,64	2,64	2,65
ESEER (E)		3,78	3,59	4,00	3,87	3,36	3,67	3,57
Eurovent Efficiency Class		C	C	C	C	D	D	D
Water flow (1)	l/h	15344	17280	17280	17761	19234	19227	19829
Water pressure drop (1) (E)	kPa	25	29	29	29	27	27	27
Standard pump available pressure head (1)	kPa	135	129	129	132	122	122	121
Heating capacity (3) (E)	kW	101	109	110	114	130	130	134
Power input (3) (E)	kW	29,4	31,2	32,4	33,7	37,7	37,6	38,7
COP (3) (E)		3,45	3,48	3,38	3,37	3,44	3,45	3,47
Eurovent Efficiency Class		A	A	A	A	A	A	A
Water flow (3)	l/h	17520	18810	18940	19660	22420	22500	23210
Water pressure drop (3) (E)	kPa	33	35	35	37	39	39	39
Standard pump available pressure head (3)	kPa	118	108	109	110	100	99	97
Maximum current absorption	A	81	86	86	87	95	95	96
Start up current	A	194	254	254	198	295	295	220
Start up current with softstarter kit	A	126	192	192	129	221	221	150
nr. of compressors / circuits		4 / 2	2 / 2	2 / 1	4 / 2	2 / 2	2 / 1	4 / 2
Water tank volume	dm^3	340	340	340	340	600	600	600
Expansion vessel	dm^3	12	12	12	12	24	24	24
Sound power level (2) (E)	dB(A)	74	75	75	74	76	76	73
Operating weight of base unit	kg	980	915	915	980	1260	1260	1275
Operating weight of unit with pump and full tank	kg	1557	1436	1436	1557	2040	2040	2055

(1) Water temperature 12/7°C; outdoor air temperature 35°C (14511:2011)
(2) Sound power level measured according to UNI EN ISO 9614
(3) Water temperature 40/45 °C, outdoor air temperature 7 °C D.B. - 6 °C W.B. (14511:2011)
(E) EUROVENT certified data



LCX HQ Rated technical data of water chillers

LCX…HQ		141	142	144	161	162	164
Power supply	V-ph-Hz	400-3N-50					
Cooling capacity (1) (E)	kW	119	119	124	149	149	138
Power supply (1) (E)	kW	46,5	46,5	46,3	58,4	58,4	55,8
EER (1) (E)		2,56	2,56	2,67	2,55	2,55	2,46
ESEER (E)		3,40	3,68	3,83	3,52	3,74	3,64
Eurovent Efficiency Class		D	D	D	D	D	E
Water flow (1)	l/h	23303	23303	23667	26051	26051	25816
Water pressure drop (1) (E)	kPa	47	47	48	40	41	40
Standard pump available pressure head (1)	kPa	153	153	151	151	151	152
Heating capacity (3) (E)	kW	143	143	149	175	175	169
Power input (3) (E)	kW	44,5	44,5	43,3	52,7	52,7	50
COP (3) (E)		3,20	3,22	3,44	3,33	3,33	3,36
Eurovent Efficiency Class		A	A	A	A	A	A
Water flow (3)	l/h	24675	24789	25820	30325	30325	29248
Water pressure drop (3) (E)	kPa	39	40	39	44	44	40
Standard pump available pressure head (3)	kPa	152	151	147	131	131	137
Maximum current absorption	A	106	106	105	120	120	126
Start up current	A	306	306	222	371	371	241
Start up current with softstarter kit	A	231	231	168	276	279	195
nr. of compressors / circuits		2 / 2	2 / 1	4 / 2	2 / 2	2 / 1	4 / 2
Water tank volume	dm^3	600	600	600	600	600	600
Expansion vessel	dm^3	24	24	24	24	24	24
Sound power level (2) (E)	dB(A)	77	77	73	77	77	73
Operating weight of base unit	kg	1310	1310	1290	1330	1330	1440
Operating weight of unit with pump and full tank	kg	2090	2090	2070	2110	2110	2220

LCX…HQ		194	214	244	274	294	324
Power supply	V-ph-Hz	400 - 3N - 50					
Cooling capacity (1) (E)	kW	160	177	194	239	259	280
Power supply (1) (E)	kW	70,4	79,2	87,0	89,8	107,4	121,8
EER (1) (E)		2,27	2,23	2,23	2,66	2,41	2,30
ESEER (E)		3,30	3,44	3,36	3,26	3,30	3,31
Eurovent Efficiency Class		F	F	F	D	E	D
Water flow (1)	l/h	27519	30461	33466	41098	44631	48237
Water pressure drop (1) (E)	kPa	29	28	29	34	33	32
Standard pump available pressure head (1)	kPa	178	189	208	184	177	174
Heating capacity (3) (E)	kW	199	225	253	286	318	352
Power input (3) (E)	kW	59,5	66,6	76,	84,6	95,9	107,9
COP (3) (E)		3,34	3,38	3,32	3,38	3,31	3,26
Eurovent Efficiency Class		A	A	A	A	A	A
Water flow (3)	l/h	34382	39009	43700	49424	54968	60858
Water pressure drop (3) (E)	kPa	46	45	48	49	49	50
Standard pump available pressure head (3)	kPa	122	118	163	147	133	118
Maximum current absorption	A	148	167	190	213	226	240
Start up current	A	314	328	395	396	465	475
Start up current with softstarter kit	A	204	213	257	258	302	309
nr. of compressors / circuits		4/2	4/2	4/2	4/2	4/2	4/2
Water tank volume	dm^3	600	600	600	765	765	765
Expansion vessel	dm^3	24	24	24	24	24	24
Sound power level (2) (E)	dB(A)	78	78	78	80	80	80
Operating weight of base unit	kg	1460	1510	1620	1880	1912	1947
Operating weight of unit with pump and full tank	kg	2276	2326	2469	2894	2926	2961

(1) Water temperature 12/7°C; outdoor air temperature 35°C (14511:2011)
(2) Sound power level measured according to UNI EN ISO 9614
(3) Water temperature 40/45 °C, outdoor air temperature 7 °C D.B. - 6 °C W.B. (14511:2011)
(E) EUROVENT certified data

Dimensional drawings

LCX FRAME 1

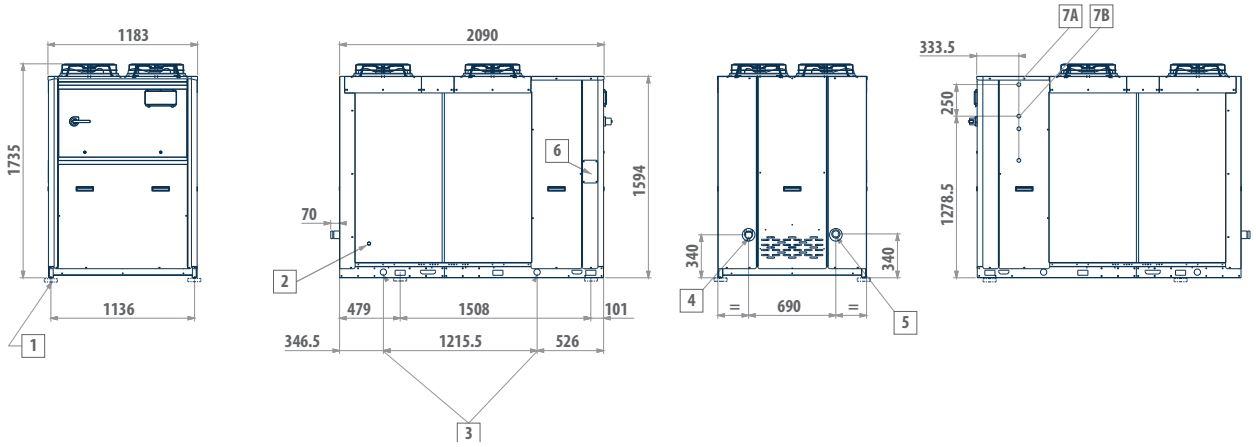

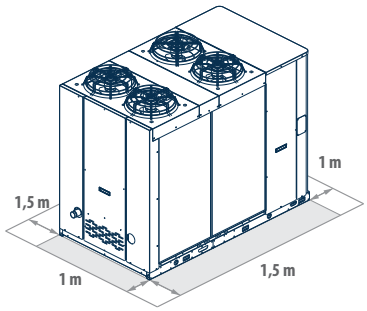

Model	Version
LCX 42	L - Q
LCX 52	L - Q
LCX 62	S
LCX 72	S
LCX 82	S

LEGEND	
1	Vibration dampers
2	Protective grille (optional)
3	Fastening points
4	Water inlet (Victaulic 2″)
5	Water outlet (Victaulic 2″)
6	Power supply input
7A	Heat recovery water outlet (1″)
7B	Heat recovery water inlet (1″)



Dimensional drawings

LCX FRAME 2

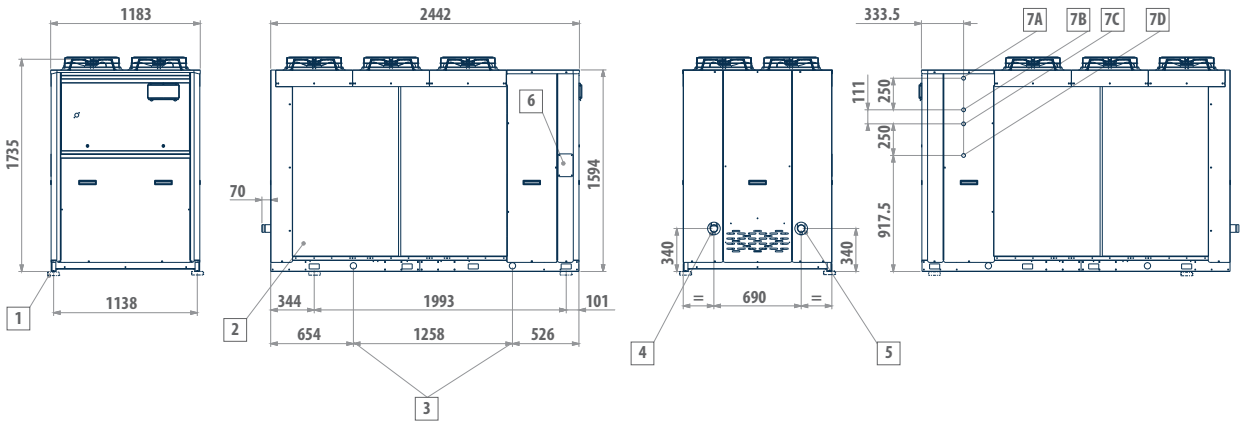

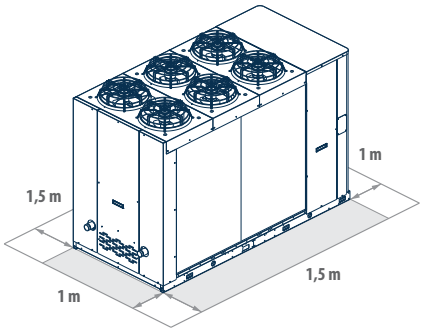

Model	Version
LCX 62	L - Q
LCX 72	L - Q
LCX 82	L - Q
LCX 91	S
LCX 92	S
LCX 101	S
LCX 102	S

LEGEND

1	Vibration dampers
2	Protective grille (optional)
3	Fastening points
4	Water inlet (Victaulic 2”)
5	Water outlet (Victaulic 2”)
6	Power supply input
7A	Heat recovery water outlet (1”), left-hand circuit
7B	Heat recovery water inlet (1”), left-hand circuit
7C	Heat recovery water outlet (1”), right-hand circuit
7D	Heat recovery water inlet (1”), right-hand circuit

Dimensional drawings

LCX FRAME 3

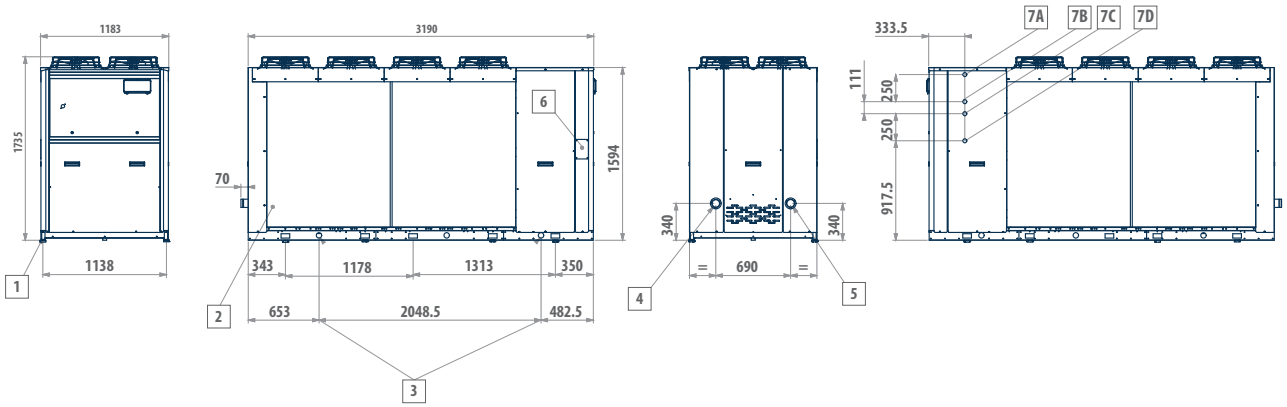

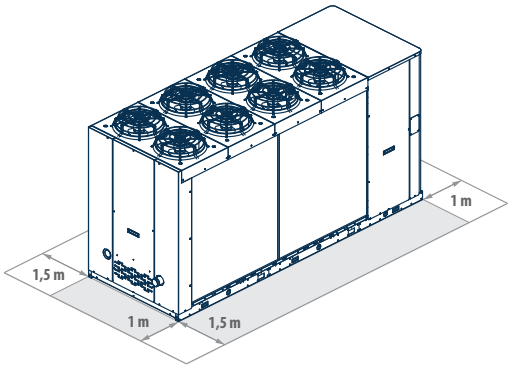

Model	Version
LCX 91	L - Q
LCX 92	L - Q
LCX 101	L - Q
LCX 102	L - Q
LCX 121	S
LCX 122	S
LCX 141	S
LCX 142	S
LCX 161	S
LCX 162	S

LEGEND

1	Vibration dampers	**6**	Power supply input
2	Protective grille (optional)	**7A**	Heat recovery water outlet (1"), left-hand circuit
3	Fastening points	**7B**	Heat recovery water inlet (1"), left-hand circuit
4	Water inlet (Victaulic 2"½)	**7C**	Heat recovery water outlet (1"), right-hand circuit
5	Water outlet (Victaulic 2"½)	**7D**	Heat recovery water inlet (1"), right-hand circuit



Dimensional drawings

LCX FRAME 3+

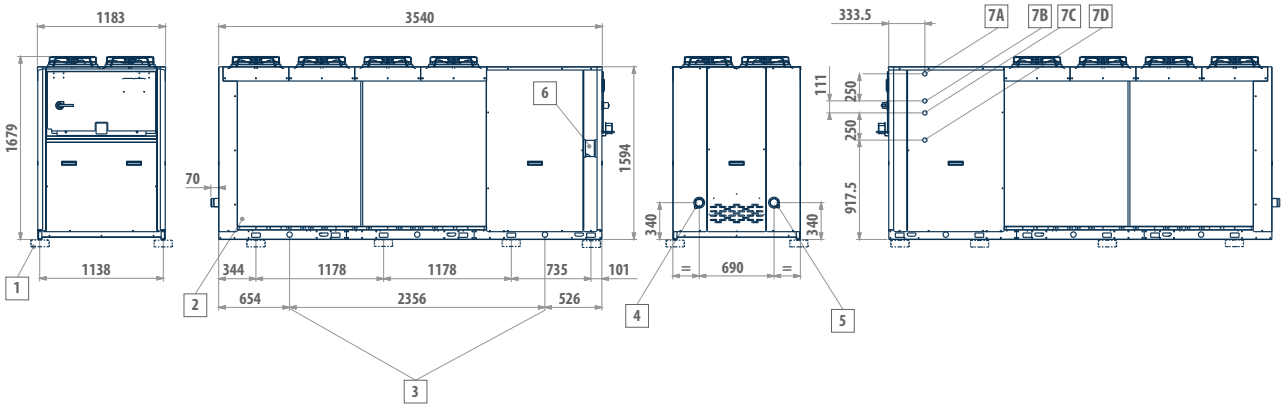

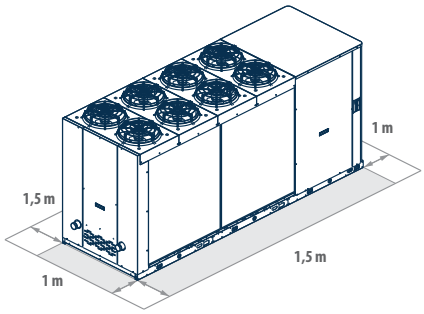

Model	Version
LCX 94	L - Q
LCX 104	L - Q
LCX 124	S
LCX 144	S
LCX 164	S
LCX 102	S

LEGEND	
1	Vibration dampers
2	Protective grille (optional)
3	Fastening points
4	Water inlet (Victaulic 2"½)
5	Water outlet (Victaulic 2"½)

6	Power supply input
7A	Heat recovery water outlet (1"), left-hand circuit
7B	Heat recovery water inlet (1"), left-hand circuit
7C	Heat recovery water outlet (1"), right-hand circuit
7D	Heat recovery water inlet (1"), right-hand circuit

Dimensional drawings

LCX FRAME 4

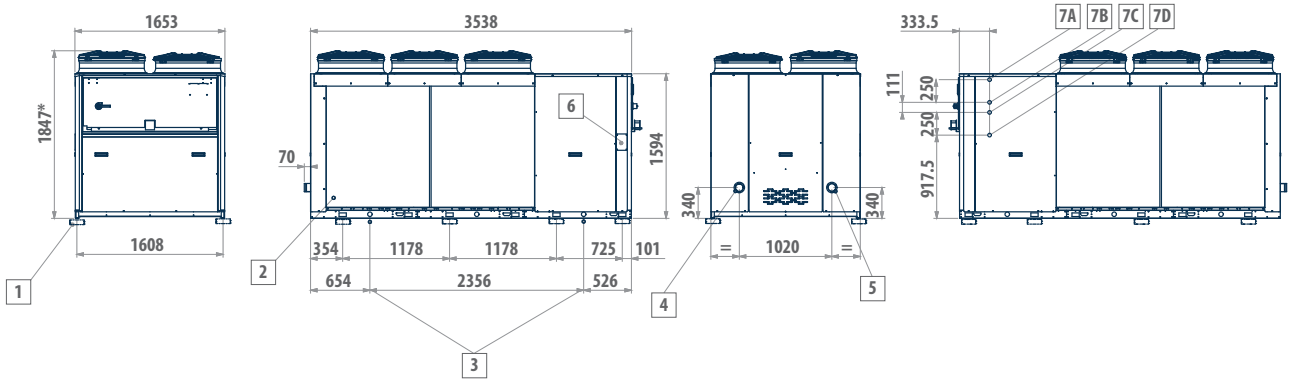

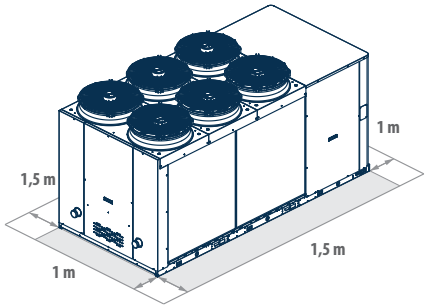

Model	Version
LCX 121	L - Q
LCX 122	L - Q
LCX 124	L - Q
LCX 141	L - Q
LCX 142	L - Q
LCX 144	L - Q
LCX 161	L - Q
LCX 162	L - Q
LCX 164	L - Q
LCX 174	S
LCX 194	S - L - Q
LCX 214	S

LEGEND	
1	Vibration dampers
2	Protective grille (optional)
3	Fastening points (optional)
4	Water inlet (Victaulic 3″)
5	Water outlet (Victaulic 3″)
6	Power supply input

7A	Heat recovery water outlet (1″), left-hand circuit
7B	Heat recovery water inlet (1″), left-hand circuit
7C	Heat recovery water outlet (1″), right-hand circuit
7D	Heat recovery water inlet (1″), right-hand circuit
*	With EC fans=1884



Dimensional drawings

LCX FRAME 5

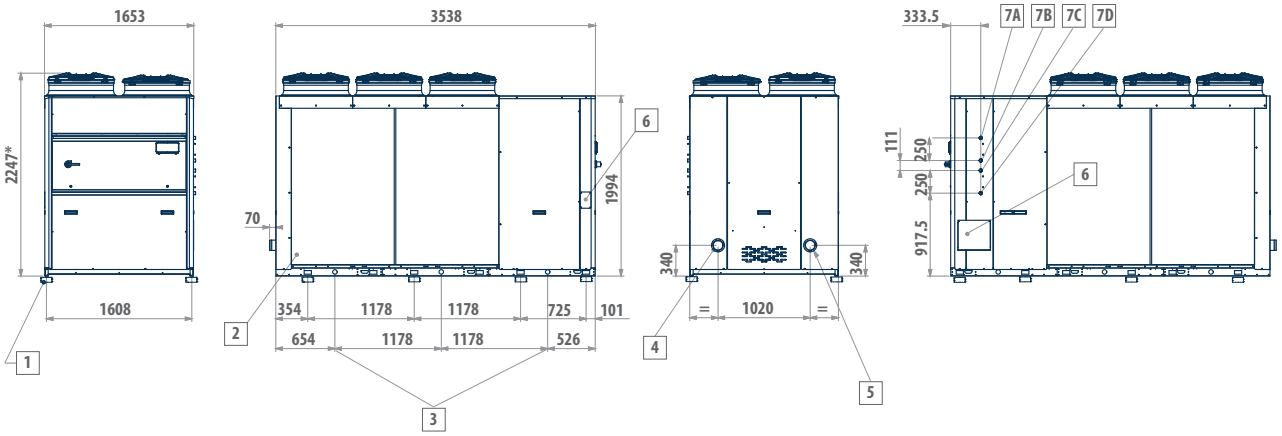

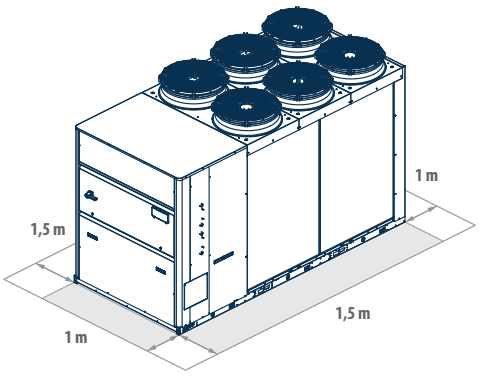

Model	Version
LCX214	L - Q
LCX 244	S - L - Q

LEGEND

1	Vibration dampers
2	Protective grille (optional)
3	Fastening points (optional)
4	Water inlet (Victaulic 4”)
5	Water outlet (Victaulic 4”)
6	Power supply input

7A	Heat recovery water outlet (1”), left-hand circuit
7B	Heat recovery water inlet (1”), left-hand circuit
7C	Heat recovery water outlet (1”), right-hand circuit
7D	Heat recovery water inlet (1”), right-hand circuit
*	With EC fans=2284

Dimensional drawings

LCX FRAME 6

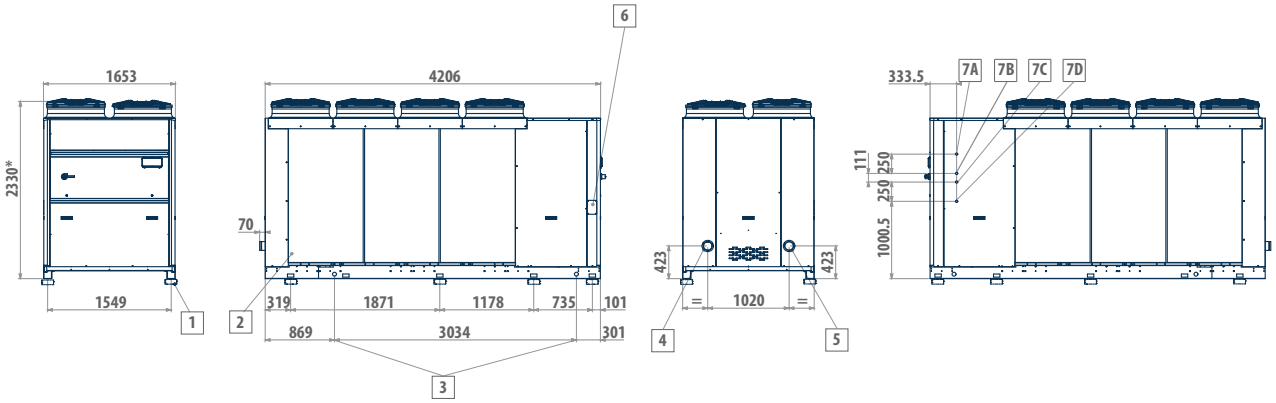

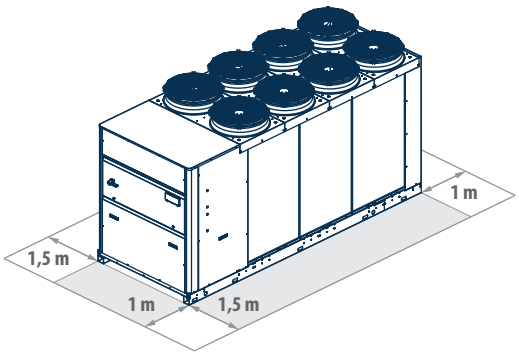

Model	Version
LCX 274	S - L - Q
LCX 294	S - L - Q
LCX 324	S - L - Q
LCX 364	S - L

LEGEND

1	Vibration dampers
2	Protective grille (optional)
3	Fastening points (optional)
4	Water inlet (Victaulic 4”)
5	Water outlet (Victaulic 4”)
6	Power supply input

7A	Heat recovery water outlet (1”), left-hand circuit
7B	Heat recovery water inlet (1”), left-hand circuit
7C	Heat recovery water outlet (1”), right-hand circuit
7D	Heat recovery water inlet (1”), right-hand circuit
*	With EC fans=2367



Outdoor packaged unit

LSE 360 - 1200 kW





Scroll compressor | R-410A refrigerant | Cooling only | Cooling / Heating | Packaged unit | Axial fans

PLUS

- High efficiency when operating at partial load
- Electronically controlled electric expansion valve
- Incorporable hydronic kit
- High configurability and wide availability of accessories
- Compact dimensions
- Access to the tax incentives provided for energy retrofitting

Multi-scroll solutions for reliability and high efficiency at partial loads

Though a water chiller or heat pump is chosen on the basis of the maximum load of the system it is intended to serve, the actual thermal load of an air conditioning system is less than 60% of the rated load capacity 90% of the time. This range of LSE heat pumps and chillers was designed to handle this type of use in the most efficient manner; it is comprised of 14 models with cooling capacities from 370 to 1200 kW (650 kW with heat pump) and employs scroll compressors in a tandem or trio connection configuration on 2 or 4 cooling circuits. The high number of capacity control steps of this solution enables the unit to adapt its power to the actual needs of the system, with particular gains in efficiency under partial load conditions compared to traditional screw compressors. During operation under part load conditions, the compressors work with oversized exchange surfaces so as to achieve more advantageous thermodynamic cycles, thanks also to the use of an electronic expansion valve, a standard feature of all models. The microprocessor control unit automatically manages turning on the compressors depending on the required thermal load and ensures rotation according to the number of hours of operation with consequent increase in the duration. LSE is available also in a free-cooling version, to reduce energy consumption when it is necessary to produce chilled water during the coldest season of the year, with silenced operation in order to comply with noise containment regulations.

The "W" configuration of the finned block heat exchangers makes it possible to have a large amount of exchange surface with a small footprint, thereby resulting in machines with high power density.

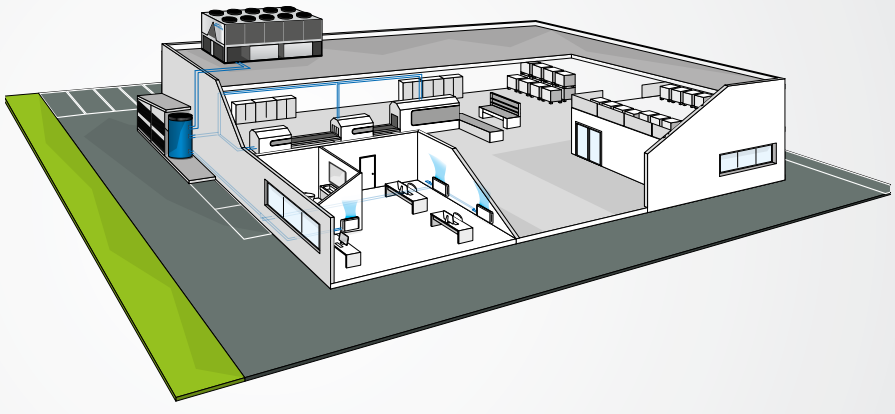



MAIN COMPONENTS

Structure

Painted galvanised sheet steel structure for an effective resistance to corrosive agents. Compressor compartment located below the finned heat exchangers to reduce the dimensions without compromising performance.

Compressors

Hermetic scroll compressors driven by electric motors and connected in tandem or trio version to maximize efficiency at partial loads.

Electronically controlled electric expansion valve

It represents, together with the compressor, the key component for the proper functioning of the unit. It optimizes the machines' operation at partial loads and increases the average seasonal energy efficiency.

Heat exchangers

Finned heat exchangers with copper pipes and aluminum fins in a "W" configuration to allow alternating defrosting operations and to minimize the negative effects on the system.

Microprocessor control

The microprocessor control unit efficiently manages the LSE units, the adjustment logic, the compressors, the alarms and, in the heat pumps, the cycle switchover and defrosting thanks to the Smart Defrost System logic.



Hydraulic kit

Option of choosing one or two pumps at standard or high head to meet system requirements, suitable for operation with glycol up to 30% and can be combined with a heat buffer tank.

CONFIGURATION

The models are completely configurable by selecting the version and the options. To the right is shown an example of configuration.

Version	Optional ▶	1	2	3	4	5	6	7	8	9	10	11	12
LSE558CL		0	B	4	S	0	C	0	2	0	0	M	3

To verify the compatibility of the options, use the selection software or the price list.

AVAILABLE VERSIONS

Cooling only versions

LSE..CS Standard execution
LSE..CL Low noise execution

Versions with reversible heat pump

LSE..HS Standard execution
LSE..HL Low noise execution

CONFIGURATION OPTIONS

1 - POWER SUPPLY
- **0** 400/3/50 + N
- **1** 400/3/50 with transformer
- **2** 400/3/50 + N + Circuit breakers
- **3** 400/3/50 with transformer+ Circuit breakers

2 - CONTROL MICROPROCESSOR AND THERMAL EXPANSION VALVE
- **B** Programmable (LCD 8x22 display) + electronic expansion valve
- **C** Programmable (LCD 8x22 display) + mechanical expansion valve

3 - WATER PUMP ON USER SIDE
- **0** Absent
- **1** Single pump
- **2** Uprated single pump
- **3** Dual pump for combined operation
- **4** Dual uprated pump for combined operation
- **5** Dual pump with timed rotation
- **6** Dual uprated pump with timed rotation

4 - BUFFER TANK
- **0** Absent
- **S** Buffer tank on user side

5 - PARTIAL HEAT RECOVERY (condensation control option is mandatory)
- **0** Absent
- **D** Desuperheater (40% of cooling capacity recovery in rated conditions)

6 - AIR FLOW MODULATION
- **0** Absent
- **C** Condensation control with fans adjusted by potentiometer
- **E** Condensation control, "EC brushless" electronically controlled fans

7 - ANTIFREEZE KIT
- **0** Absent
- **E** Present, basic unit (heating element only on exchangers)
- **P** Present, unit with pump/s and expansion tank
- **S** Present, unit with pump/s, expansion tank and tank

8 - REMOTE COMMUNICATION
- **0** Absent
- **1** RS485 Serial board (Modbus or Carel protocol)
- **2** Lonworks serial board
- **3** GSM modem kit
- **4** Ethernet card (SNMP or BACNET protocol) + clock card
- **5** Ethernet card + clock card + supervision software

9 - HEAT EXCHANGER CONSTRUCTION ON REQUEST
- **0** Standard
- **R** Copper / copper exchangers
- **C** Cataphoresis
- **B** Fins pre-coated with epoxy paint

10 - PACKING
- **0** Standard
- **1** Wooden crate
- **2** Wooden case

11 - VIBRATION ISOLATION
- **0** Absent
- **G** Rubber vibration dampers at the base of the unit
- **M** Spring vibration dampers at the base of the unit

12 - REMOTE CONTROL
- **0** Absent
- **1** Simplified remote control panel
- **3** Remote display for programmable microprocessor

ACCESSORIES

- **A** Power factor correction capacitors
- **B** Soft-starter kit (only for size 374)
- **C** Service kit (kit of sensors for quick diagnosis)
- **D** Pair of Victaulic couplings for quick water IN-OUT connection
- **E** ON/OFF status of the compressors
- **F** Remote contact for power step limits
- **G** Configurable digital alarm card
- **H** Outdoor temperature probe for setpoint compensation
- **I** Pressure gauges
- **L** Regulating filter kit (solenoid and tap on the liquid line)
- **M** Normative reference other than "97/23/CE - PED"
- **N** Clock card
- **P** Finned heat exchanger protective grille
- **Q** Metal filters for protecting finned heat exchanger

Rated technical data of LSE CS water chillers

LSE...CS		374	416	456	486	536	558	618
Power supply	V-ph-Hz	400V - 3N - 50						
Cooling capacity (1) (E)	kW	363	404	453	486	537	561	603
Power supply (1) (E)	kW	134	151	160	175	210	196	213
EER (1) (E)		2,71	2,68	2,83	2,78	2,55	2,86	2,82
ESEER (E)		4,10	4,18	4,32	4,25	4,23	4,10	4,15
Eurovent Efficiency Class		C	D	C	C	D	C	C
Water flow (1)	l/h	62608	69676	78155	83846	92478	96705	103833
Water pressure drop (1) (E)	kPa	52	53	56	50	52	46	48
Available pressure head - LP pump (1)	kPa	165	142	188	173	138	161	143
Available pressure head - HP pump (1)	kPa	260	248	271	266	247	245	244
Maximum current absorption FLA (without accessories)	A	316	352	362	382	420	462	480
Start up current LRA (without accessories)	A	454	506	563	578	563	596	637
Start up current with softstarter kit	A	429	480	536	559	569	550	604
nr. of compressors / circuits		4/2	6/2	6/2	6/2	6/2	8/4	8/4
Water tank volume	dm^3	600					1040	
Expansion vessel	dm^3	50						
Sound power level (2) (E)	dB(A)	90	90	91	91	91	92	92
Operating weight of base unit	kg	2545	2990	3361	3385	3386	4132	4217
Operating weight of unit with pump and full tank	kg	3475	3920	4291	4315	4316	5662	5747

LSE...CS		658	748	800	900	942	1072	1202
Power supply	V-ph-Hz	400V - 3N - 50						
Cooling capacity (1) (E)	kW	644	714	772	906	946	1071	1200
Power supply (1) (E)	kW	231	277	296	336	349	418	461
EER (1) (E)		2,79	2,58	2,61	2,70	2,71	2,56	2,60
ESEER (E)		4,09	4,15	4,19	4,33	4,34	4,19	4,28
Eurovent Efficiency Class		C	D	D	C	C	D	D
Water flow (1)	l/h	110961	123008	133149	156086	163152	184568	206806
Water pressure drop (1) (E)	kPa	49	51	58	56	60	51	55
Available pressure head - LP pump (1)	kPa	210	179	145	186	174	154	118
Available pressure head - HP pump (1)	kPa	237	265	250	282	270	252	216
Maximum current absorption FLA (without accessories)	A	506	564	631	765	771	792	975
Start up current LRA (without accessories)	A	648	677	738	781	871	890	1190
Start up current with softstarter kit	A	623	673	719	729	833	939	1181
nr. of compressors / circuits		8/4	8/4	10/4	10/4	12/4	12/4	12/4
Water tank volume	dm^3	1040						
Expansion vessel	dm^3	50						
Sound power level (2) (E)	dB(A)	92	92	92	93	93	93	95
Operating weight of base unit	kg	4482	4891	5090	5688	5926	6066	7300
Operating weight of unit with pump and full tank	kg	6012	6451	6650	7288	7526	7666	8930

(1) Water temperature 12/7°C; outdoor air temperature 35°C (14511:2011)
(2) Sound power level measured according to UNI EN ISO 9614
(E) EUROVENT certified data



Rated technical data of LSE CL water chillers

LSE...CL		374	416	456	486	536	558	618
Power supply	V-ph-Hz	400V - 3N - 50						
Cooling capacity (1) (E)	kW	350	387	438	470	514	544	581
Power supply (1) (E)	kW	138	156	162	178	219	198	217
EER (1) (E)		2,53	2,49	2,70	2,64	2,34	2,75	2,67
ESEER (E)		4,08	4,11	4,25	4,18	4,16	4,07	4,08
Eurovent Efficiency Class		D	E	C	D	E	C	D
Water flow (1)	l/h	60362	66689	75507	80958	88499	93675	100169
Water pressure drop (1) (E)	kPa	49	49	53	47	47	43	45
Available pressure head - LP pump (1)	kPa	175	156	201	187	159	170	154
Available pressure head - HP pump (1)	kPa	266	257	279	274	260	254	249
Maximum current absorption FLA (without accessories)	A	305	343	347	368	405	442	462
Start up current LRA (without accessories)	A	442	497	556	573	548	576	619
Start up current with softstarter kit	A	147	146	184	184	145	130	148
nr. of compressors / circuits		4/2	6/2	6/2	6/2	6/2	8/4	8/4
Water tank volume	dm^3	600					1040	
Expansion vessel	dm^3	50						
Sound power level (2) (E)	dB(A)	82	82	83	83	83	84	84
Operating weight of base unit	kg	2650	3110	3481	3525	3526	4312	4397
Operating weight of unit with pump and full tank	kg	3475	3920	4291	4315	4316	5662	5747

LSE...CL		658	748	800	900	942	1072	1202
Power supply	V-ph-Hz	400V - 3N - 50						
Cooling capacity (1) (E)	kW	619	689	740	871	911	1019	1174
Power supply (1) (E)	kW	237	283	304	348	359	442	470
EER (1) (E)		2,62	2,44	2,43	2,50	2,53	2,31	2,50
ESEER (E)		4,02	4,08	4,12	4,26	4,27	4,12	4,28
Eurovent Efficiency Class		D	E	E	D	D	E	D
Water flow (1)	l/h	106662	118788	127603	150102	156955	175580	202321
Water pressure drop (1) (E)	kPa	46	48	54	51	56	47	53
Available pressure head - LP pump (1)	kPa	223	192	164	197	185	170	127
Available pressure head - HP pump (1)	kPa	243	271	259	292	280	267	225
Maximum current absorption FLA (without accessories)	A	488	542	609	743	749	767	975
Start up current LRA (without accessories)	A	630	656	716	759	851	869	1190
Start up current with softstarter kit	A	140	125	115	61	113	114	204
nr. of compressors / circuits		8/4	8/4	10/4	10/4	12/4	12/4	12/4
Water tank volume	dm^3	1040						
Expansion vessel	dm^3	50						
Sound power level (2) (E)	dB(A)	84	85	85	87	85	85	92
Operating weight of base unit	kg	4662	4996	5195	5928	6166	6406	7300
Operating weight of unit with pump and full tank	kg	6012	6451	6650	7288	7526	7666	8930

(1) Water temperature 12/7°C; outdoor air temperature 35°C (14511:2011)
(2) Sound power level measured according to UNI EN ISO 9614
(E) EUROVENT certified data

Rated technical data of LSE HS heat pumps

LSE...HS		374	416	456	486	536	558	618	658
Power supply	V-ph-Hz	400 - 3N - 50							
Cooling capacity (1) (E)	kW	363	404	453	486	537	561	603	644
Total power input (1) (E)	kW	134	151	160	175	210	196	213	231
EER (1) (E)		2,71	2,68	2,83	2,78	2,55	2,86	2,82	2,79
ESEER (E)		4,26	4,18	4,32	4,25	4,23	4,15	4,15	4,09
Eurovent Efficiency class		C	D	C	C	D	C	C	C
Water flow rate (1)	l/h	62453	69505	77950	83661	92278	96526	103630	110751
Pressure drop, water side (1) (E)	kPa	54	56	57	51	52	46	50	52
Head available - Pumps (OR) LP (1)	kPa	154	125	176	160	128	151	125	191
Head available - Pumps (OR) HP (1)	kPa	252	236	262	257	241	235	234	227
Heating capacity (2) (E)	kW	424	470	516	553	624	651	700	748
Total power input (2) (E)	kW	130	142	156	166	191	192	207	221
COP (2) (E)		3,27	3,31	3,31	3,33	3,27	3,39	3,39	3,38
Efficiency class Eurovent		A	A	A	A	A	A	A	A
Water flow rate (2)	l/h	73388	81350	89265	95556	107783	112689	121079	129468
Pressure drop, water side (2) (E)	kPa	66	66	67	72	77	56	59	60
Head available - Pumps (OR) LP (2)	kPa	117	88	135	106	98	112	87	151
Head available - Pumps (OR) HP (2)	kPa	227	213	237	220	188	197	216	208
FLA Maximum absorbed current (without accessories)	A	316	352	362	382	465	462	480	506
LRA Startup current (without accessories)	A	454	506	563	578	563	596	637	648
LRA Startup current with softstarter	A	429	480	536	559	569	550	604	623
n° of scroll compressor/ circuits		4/2	6/2	6/2	6/2	6/2	8/4	8/4	8/4
Buffer tank	dm^3	600					1040		
Expansion tank	dm^3	50	50	50	50	50	50	50	50
Sound power level Lw (3) (E)	dB(A)	90			91			92	
Weight without accessories	kg	2685	3130	3501	3545	3546	4382	4467	4682
Weight with pump and tank	kg	3615	3460	3831	3875	3876	5912	4957	5172

(1) Water temperature 12/7 °C, outdoor air temperature 35 °C (UNI EN 14511:2011)
(2) Water temperature 40/45 °C, outdoor air temperature 7 °C D.B. - 6 °C W.B. (UNI EN 14511:2011)
(3) Sound power level measured according to UNI EN ISO 9614
(E) EUROVENT certified data



Rated technical data of LSE HL heat pumps

LSE…HL		374	416	456	486	536	558	618	658
Power supply	V-ph-Hz	400 - 3N - 50							
Cooling capacity (1) (E)	kW	350	387	438	470	514	544	581	619
Total power input (1) (E)	kW	138	156	162	178	219	198	217	237
EER (1) (E)		2,53	2,49	2,70	2,64	2,34	2,75	2,67	2,62
ESEER (E)		4,19	4,11	4,25	4,18	4,16	4,07	4,08	4,02
Eurovent Efficiency class		D	E	C	D	E	C	D	D
Water flow rate (1)	l/h	60362	66689	75507	80958	88499	93675	100169	106662
Pressure drop, water side (1) (E)	kPa	49	49	53	47	47	43	45	46
Head available - Pumps (OR) LP (1)	kPa	175	156	201	187	159	170	154	223
Head available - Pumps (OR) HP (1)	kPa	266	257	279	274	260	254	249	243
Heating capacity (2) (E)	kW	422	468	514	550	621	645	693	741
Total power input (2) (E)	kW	126	139	151	161	186	186	201	215
COP (2) (E)		3,35	3,38	3,40	3,41	3,34	3,47	3,45	3,44
Efficiency class Eurovent		A	A	A	A	A	A	A	A
Water flow rate (2)	l/h	73039	80970	88850	95110	107270	111650	119960	128200
Pressure drop, water side (2) (E)	kPa	65	66	66	71	76	55	58	59
Head available - Pumps (OR) LP (2)	kPa	118	90	138	108	51	115	91	155
Head available - Pumps (OR) HP (2)	kPa	229	214	239	221	190	200	218	210
FLA Maximum absorbed current (without accessories)	A	305	343	347	368	451	442	462	488
LRA Startup current (without accessories)	A	442	497	556	573	548	576	619	630
LRA Startup current with softstarter	A	429	480	536	559	569	550	604	623
n° of scroll compressor/ circuits		4/2	6/2	6/2	6/2	6/2	8/4	8/4	8/4
Buffer tank	dm^3	50							
Expansion tank	dm^3	50	50	50	50	50	50	50	50
Sound power level Lw (3) (eE)	dB(A)	82		83			84		
Weight without accessories	kg	2685	3130	3501	3545	3546	4382	4467	4682
Weight with pump and tank	kg	3615	3460	3831	3875	3876	5912	4957	5172

(1) Water temperature 12/7 °C, outdoor air temperature 35 °C (UNI EN 14511:2011)
(2) Water temperature 40/45 °C, outdoor air temperature 7 °C D.B. - 6 °C W.B. (UNI EN 14511:2011)
(3) Sound power level measured according to UNI EN ISO 9614
(E) EUROVENT certified data

Dimensional drawings

LSE 374 - 416

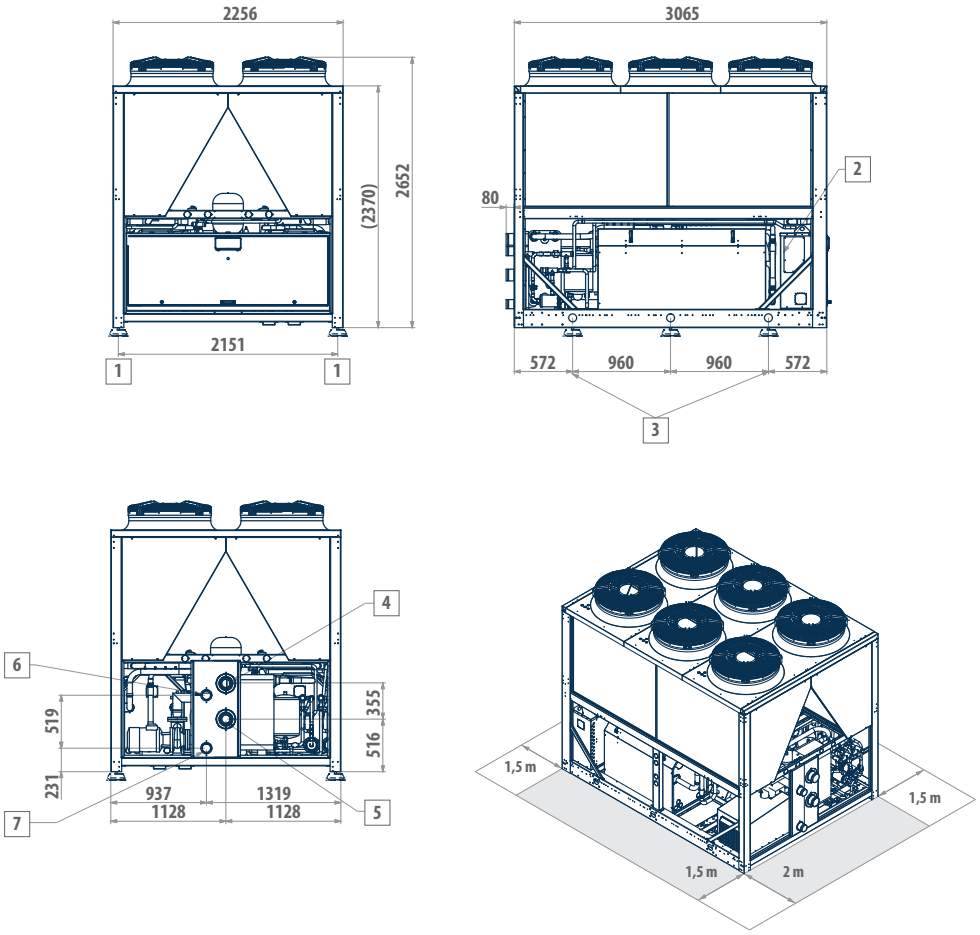

LEGEND	
1	Vibration dampers
2	Power supply input
3	Fastening points
4	Water inlet (4"Victaulic)
5	Water outlet (4"Victaulic)
6	Optional heat recovery water outlet (Victaulic 3")
7	Optional heat recovery water inlet (Victaulic 3")



Dimensional drawings

LSE 456 - 486 - 536

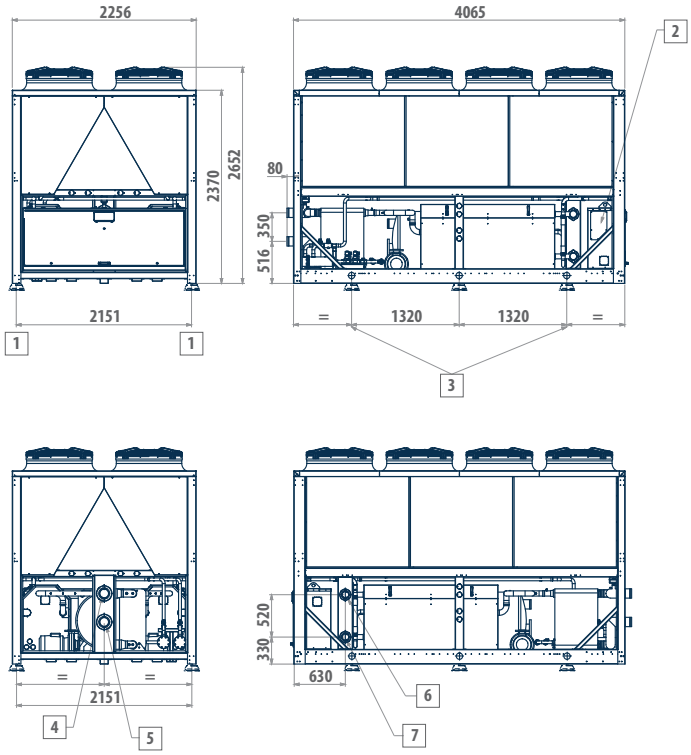

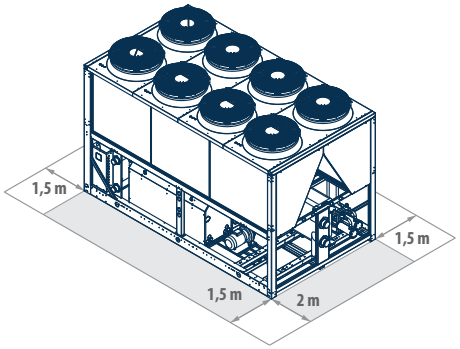

LEGEND	
1	Vibration dampers
2	Power supply input
3	Fastening points
4	Water inlet (4" Victaulic)
5	Water outlet (4" Victaulic)
6	Optional heat recovery water outlet (Victaulic 3")
7	Optional heat recovery water inlet (Victaulic 3")

Dimensional drawings

LSE 558 - 618 - 658

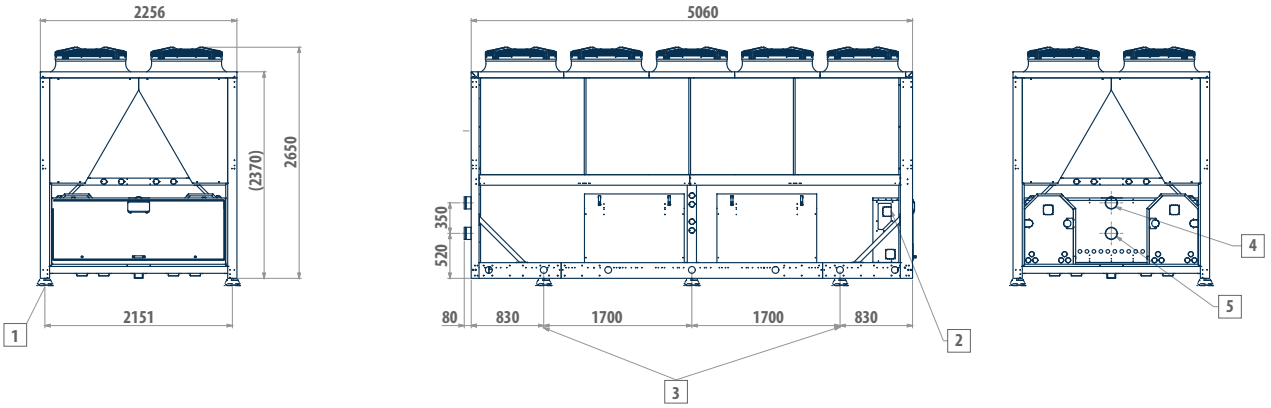

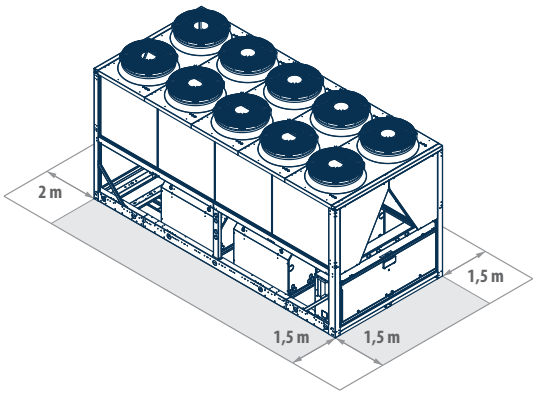

LEGEND

1	Vibration dampers
2	Power supply input
3	Fastening points
4	Water inlet (5"Victaulic)
5	Water outlet (5"Victaulic)



Dimensional drawings

LSE 748 - 800

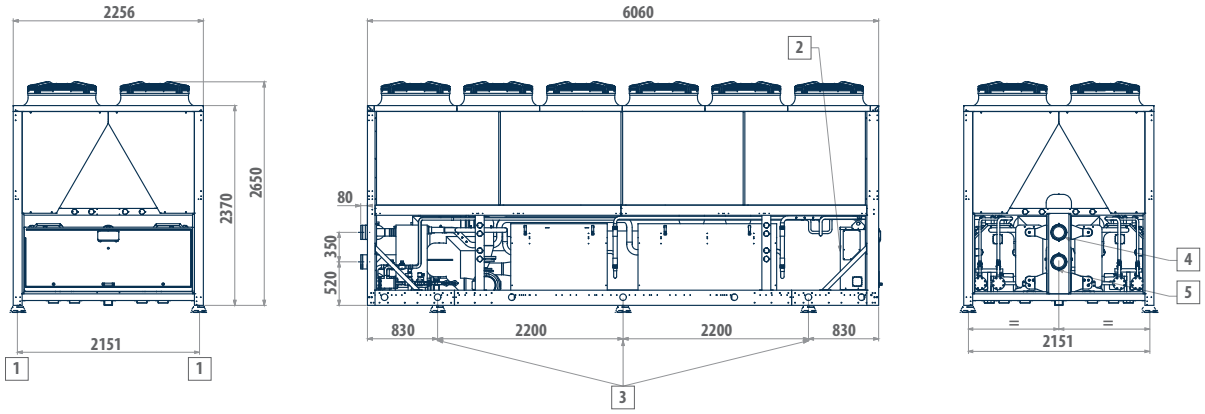

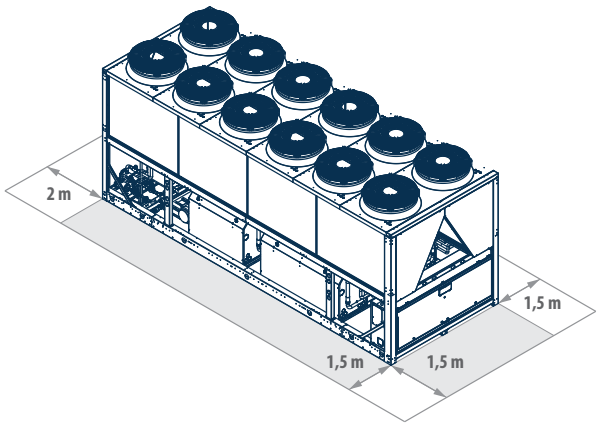

LEGEND	
1	Vibration dampers
2	Power supply input
3	Fastening points
4	Water inlet (6" Victaulic)
5	Water outlet (6" Victaulic)

Dimensional drawings

LSE 900 - 942 - 1072

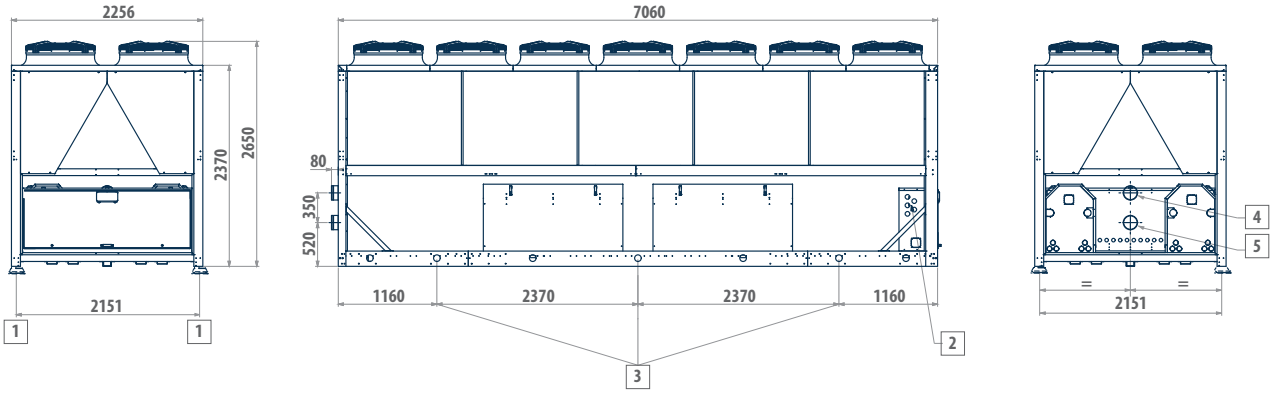

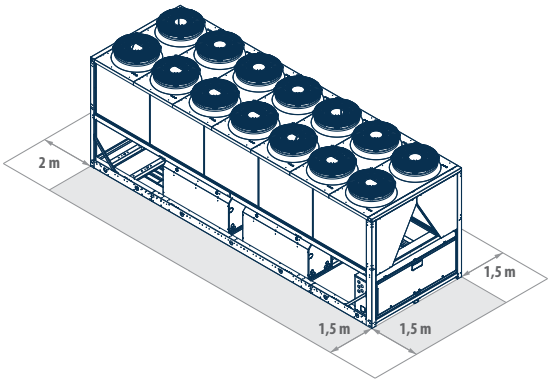

LEGEND	
1	Vibration dampers
2	Power supply input
3	Fastening points
4	Water inlet (6" Victaulic)
5	Water outlet (6" Victaulic)

Dimensional drawings

LSE 1202

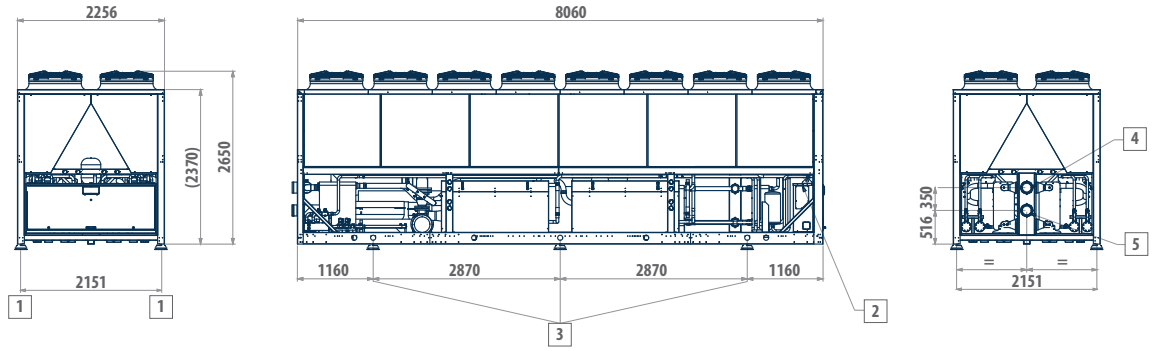

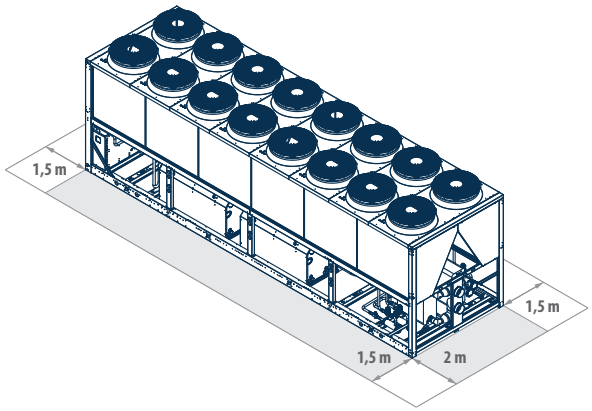

LEGEND	
1	Vibration dampers
2	Power supply input
3	Fastening points
4	Water inlet (6"Victaulic)
5	Water outlet (6"Victaulic)
6	Optional heat recovery water outlet (Victaulic 4")
7	Optional heat recovery water inlet (Victaulic 4")

Outdoor motor-driven condensing units

MTE 5 - 205 kW





Scroll compressor | R-410A refrigerant | Cooling only | Split version | Axial fans

Efficiency and compactness for commercial air conditioning

MTE Air-cooled motor-driven packaged condensing units are designed for outdoor installation in both residential and industrial applications.
The range uses R410A refrigerant, which assures high levels of performance with relatively low energy consumption and features 29 models in the chiller version, with cooling capacities ranging from 5 to 213 kW.
These units are employed in 2-section systems, which are normally connected to air evaporator coils in ducted air conditioning units.
Its extreme compactness facilitates the handling and installation of the units, even in situations with reduced installation space.
The equipment compartment is completely sealed and may be accessed on 3 sides thanks to easy-to-remove panels that greatly simplify maintenance and/or inspection. On request sound insulation makes it possible to further reduce the unit's noise emissions.
The cooling circuit is completely precharged with nitrogen. The liquid receiver (available as an optional accessory) compensates for variations in the load that occur in the system when the operating conditions change (day/night - summer/winter). Its use is also recommended for long sections of the circuit.

PLUS

- Compact dimensions
- Up to 4 compressors
- 1 or 2 cooling circuits
- Remote connectivity with the most common protocols

MTE condensing units are included in typical commercial applications where it is necessary to combine them with air evaporating units.

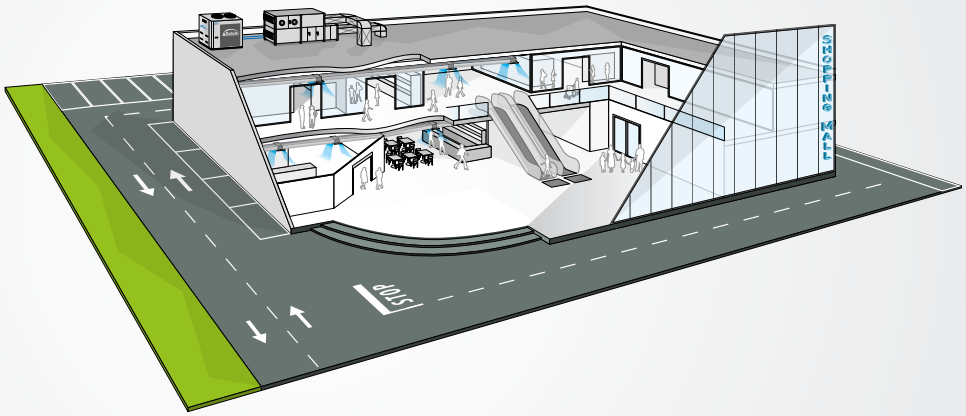



MAIN COMPONENTS

Structure

Painted galvanised sheet steel structure (RAL9002) for an effective resistance to corrosive agents.
Fastening devices are made of non-oxidizable carbon steel that has undergone surface-passivating treatments.

Fan drive assembly

Axial fans with airfoil blades made of plastic-aluminum composite, connected to an electric motor with external rotor. The condensation control system continuously and automatically regulates the fan speed.

Compressor

Hermetic scroll type (rotary up to 7 kW), housed in a completely closed compartment that can be sound insulated. There is a heating element (standard feature) on the compressor's cover to counter oil dilution.

Electric control board

Electrical control panel with microprocessor controller accessible from the outside and low-voltage output for dry-contact thermostatic control of the unit, external disconnect switch, phase sequence control.

Cooling circuit

- Dehydrating filter.
- Flow and humidity indicator
- High and low pressure switches
- Safety valve
- Shut-off valves on the liquid and gas line
- Nitrogen precharge under pressure
- Thermostatic valve, Refrigerant pressure gauges, and liquid receiver as optional accessories

Heat exchanger

Made of 8mm diameter copper pipes and aluminium fins, generously sized. A protection grille is available as an accessory.



CONFIGURATION

The models are completely configurable by selecting the version and the options. To the right is shown an example of configuration.

Version	Fields ▶	1	2	3	4	5	6	7	8	9	10	11	12	13
MTE074C0AA		0	2	S	0	C	1	1	M	0	0	G	1	1

To verify the compatibility of the options, use the selection software or the price list.

AVAILABLE VERSIONS

Cooling only versions
MTE…C0AA Unit with 400V - 3N - 50 Hz power supply
MTE…CMAA Unit with 230V - 1 - 50 Hz power supply

CONFIGURATION OPTIONS

1 - EXPANSION VALVE
- **0** Absent
- **T** Traditional
- **A** Electronic 230V

2 - LIQUID RECEIVER
- **0** Absent
- **2** Present with cock

3 - LIQUID LINE ACCESSORIES
- **0** Absent
- **S** Liquid line solenoid

4 - PARTIAL HEAT RECOVERY (the condensation control must be added)
- **0** Absent

5 - AIR FLOW MODULATION
- **0** Absent
- **C** Condensation control with fans adjusted by potentiometer

6 - PHASE SEQUENCE RELAY
- **1** Present (400V - 3N - 50 Hz only)

7 - SOUND INSULATION
- **0** Absent
- **1** Compressor compartment soundproofing
- **2** Compressor silencing housings
- **3** Opt 1 + Opt 2

8 - COOLING ACCESSORIES
- **0** None
- **M** Refrigerant pressure gauges

9 - REMOTE CONTROL
- **0** Absent
- **2** Output RS485 (Modbus or Carel protocol)
- **S** Simplified remote control
- **M** BASE microprocessor remote control (modbus disabling)

10 -SPECIAL HEAT EXCHANGERS
- **0** Standard
- **R** Copper / copper
- **C** Cataphoresis
- **B** Fins pre-coated with epoxy paint

11 - HEAT EXCHANGER PROTECTIVE GRILLE
- **0** Absent
- **G** Present

12 - COMPRESSOR OPTIONS
- **1** Crankcase heating element
- **2** Soft starter

13 - ELECTRONIC CONTROLLER
- **1** BASE microprocessor

ACCESSORIES

- Base rubber vibration dumpers
- Kit of spring vibration dampers

Rated technical data of MTE motor-driven evaporating units

MTE-C		005 M	007 M	009 M	009	010 M	010	012	013
Power supply	V-ph-Hz	230-1-50	230-1-50	230-1-50	400-3N-50	230-1-50	400-3N-50	400-3N-50	400-3N-50
Cooling capacity (1)	kW	5,40	7,11	9,12	9,15	9,60	9,58	12,2	13,4
Power input (1)	kW	1,72	2,30	3,34	3,15	3,36	3,36	4,42	4,43
EER	-	3,15	3,10	2,73	2,91	2,86	2,85	2,75	3,03
Maximum current absorption	A	12	16	20	7	23	9	11	11
Start up current	A	57	57	57	41	87	43	57	57
Start up current with softstarter kit	A	40	40	40	28	61	30	40	40
nr. of compressors / circuits	n°	1/1	1/1	1/1	1/1	1/1	1/1	1/1	1/1
Sound power level (2)	dB(A)	67	67	67	67	69	69	69	70
Weight	kg	72	85	94	94	165	165	168	170

MTE-C		015	018	021	024	029	033	038
Power supply	V-ph-Hz	400-3N-50	400-3N-50	400-3N-50	400-3N-50	400-3N-50	400-3N-50	400-3N-50
Cooling capacity (1)	kW	15,3	18,4	20,8	24,4	29,3	33,0	37,7
Power input (1)	kW	5,48	6,65	7,50	8,42	9,88	11,5	12,3
EER	-	2,78	2,77	2,77	2,90	2,96	2,88	3,07
Maximum current absorption	A	13	17	18	20	28	31	34
Start up current	A	59	66	92	92	117	147	142
Start up current with softstarter kit	A	42	46	64	64	82	103	100
nr. of compressors / circuits	n°	1/1	1/1	1/1	1/1	1/1	1/1	1/1
Sound power level (2)	dB(A)	70	77	77	77	80	80	80
Weight	kg	170	175	190	204	230	239	259

MTE-C		042	053	059	066	074	082	096
Power supply	V-ph-Hz	400-3N-50	400-3N-50	400-3N-50	400-3N-50	400-3N-50	400-3N-50	400-3N-50
Cooling capacity (1)	kW	42,3	53,0	58,5	66,0	73,7	82,1	96,2
Power input (1)	kW	13,5	16,2	18,2	21,3	23,6	27,8	32,9
EER	-	3,14	3,27	3,21	3,10	3,12	2,95	2,92
Maximum current absorption	A	36	46	49	56	61	69	81
Start up current	A	144	196	202	218	237	262	295
Start up current with softstarter kit	A	101	151	156	169	184	204	230
nr. of compressors / circuits	n°	1/1	2/1	2/1	2/1	2/1	2/1	2/1
Sound power level (2)	dB(A)	82	76	76	76	77	80	82
Weight	kg	360	525	530	540	570	650	730

MTE-C		108	129	142	163	169	193	214
Power supply	V-ph-Hz	400-3N-50	400-3N-50	400-3N-50	400-3N-50	400-3N-50	400-3N-50	400-3N-50
Cooling capacity (1)	kW	108	129	142	163	169	193	214
Power input (1)	kW	38,4	41,0	46,0	57,9	55,9	66,2	78,5
EER	-	2,80	3,14	3,09	2,82	3,03	2,91	2,72
Maximum current absorption	A	90	103	113	136	137	155	174
Start up current	A	339	363	379	467	349	416	450
Start up current with softstarter kit	A	264	285	299	368	286	338	367
nr. of compressors / circuits	n°	2/1	2/1	2/1	2/1	4/2	4/2	4/2
Sound power level (2)	dB(A)	82	82	82	83	83	84	84
Weight	kg	730	1010	1055	1085	1330	1460	1470

(1) Outdoor air temperature 35°C, evaporation temperature 5°C
(2) Sound power level measured according to UNI EN ISO 9614



Dimensional drawings

MTE 05 - 09

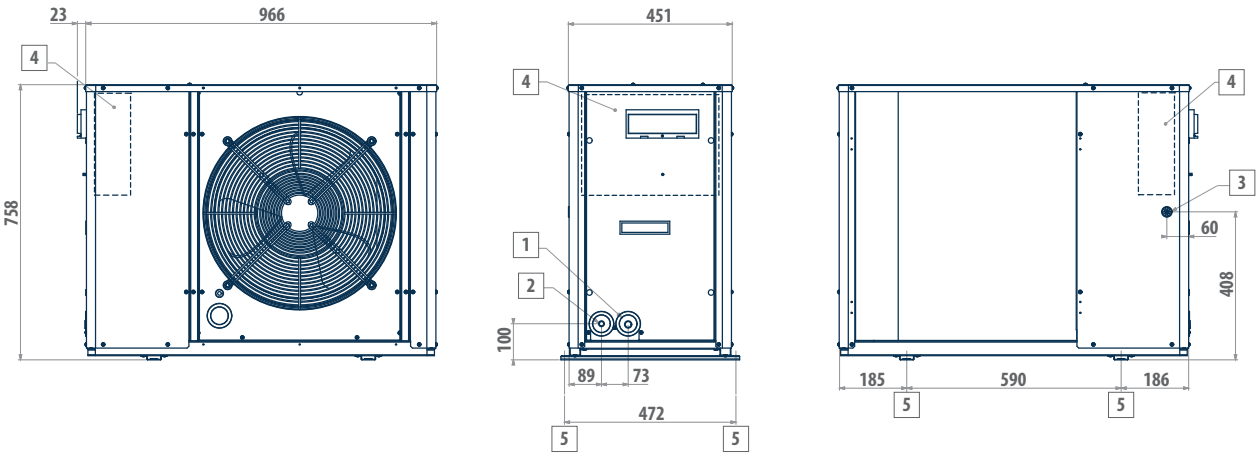

LEGEND	
1	Gas inlet Ø 16
2	Liquid outlet Ø 12
3	Power supply, Ø 37 mm
4	Electric control board
5	Vibration dampers

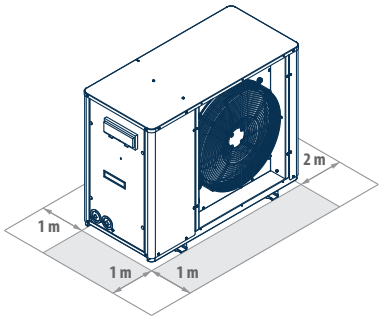

MTE 10 - 24

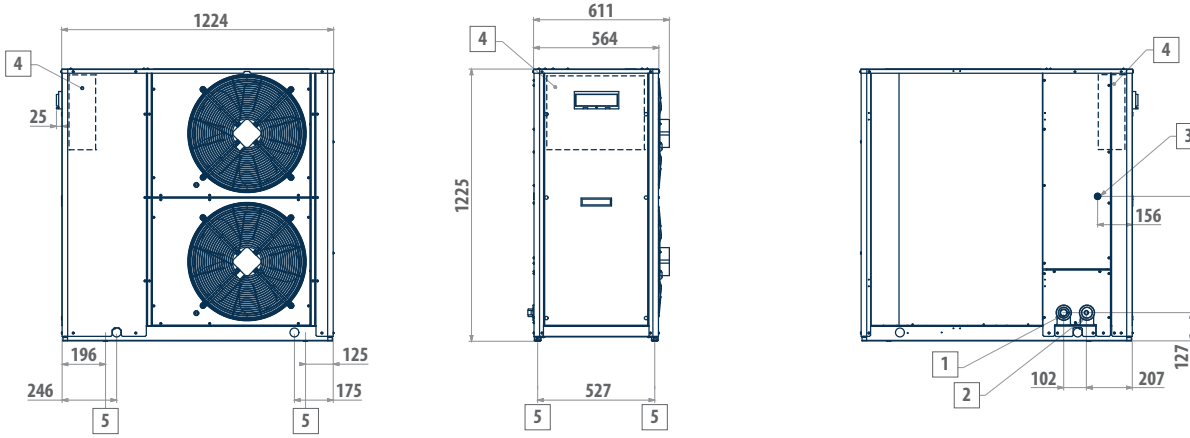

LEGEND	
1	Gas inlet Ø 28
2	Liquid outlet Ø 16
3	Power supply, Ø 37 mm
4	Electric control board
5	Vibration dampers

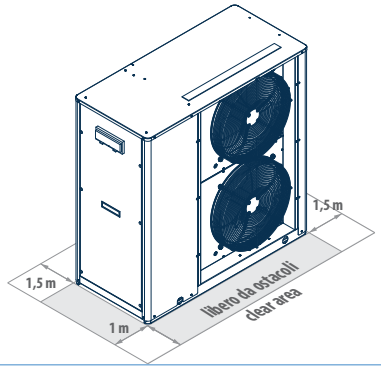

Dimensional drawings

MTE 29 - 38

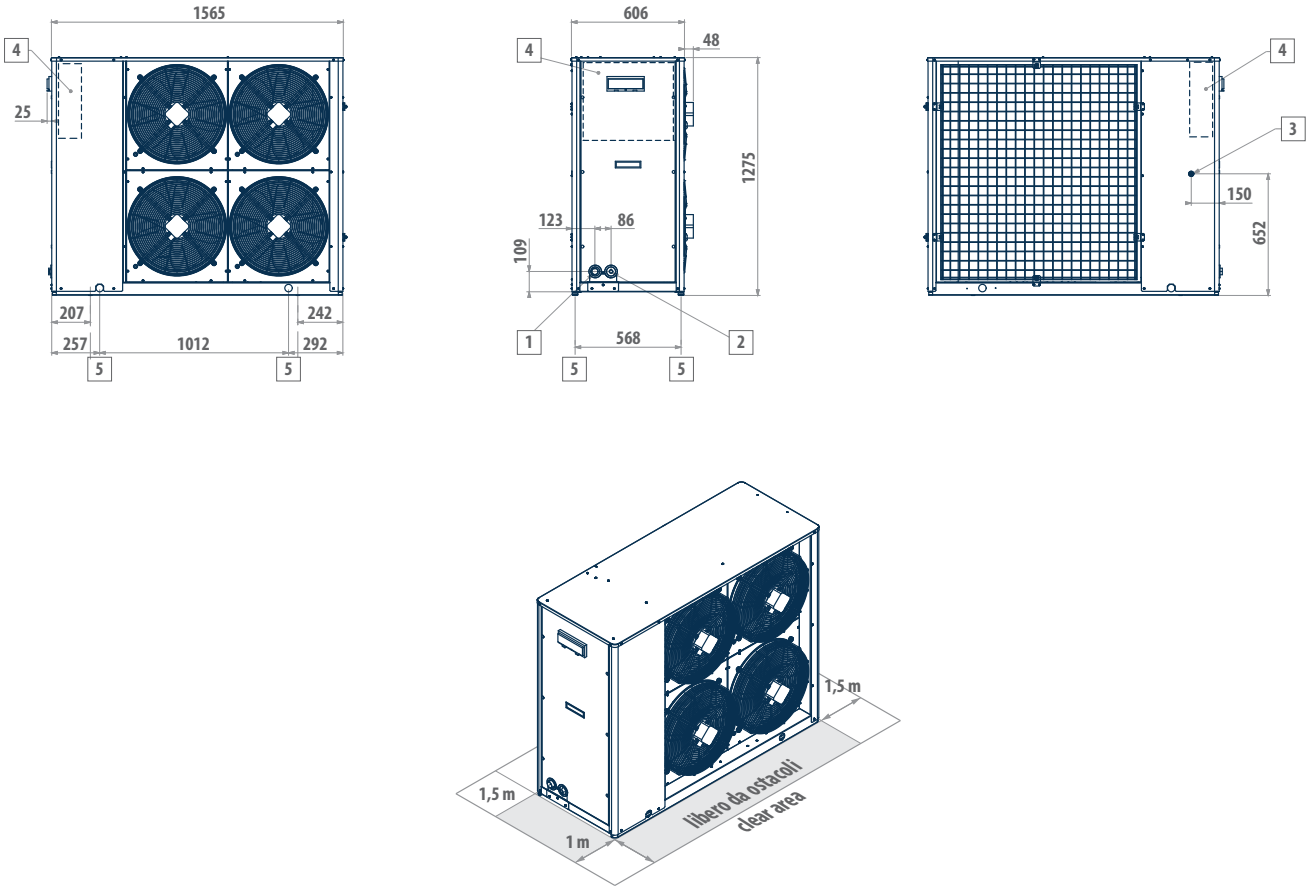

LEGEND	
1	Gas inlet Ø 35
2	Liquid outlet Ø 16
3	Power supply, Ø 37 mm
4	Electric control board
5	Vibration dampers



Dimensional drawings

MTE 42

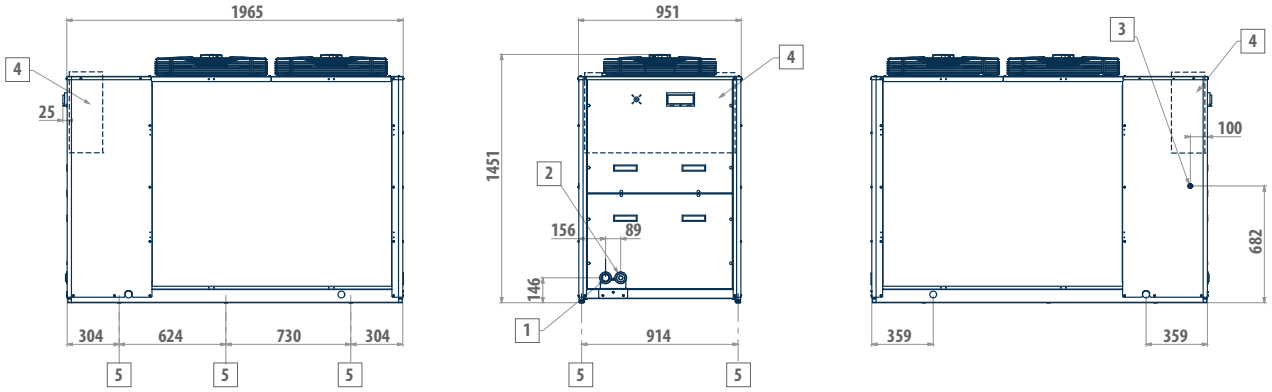

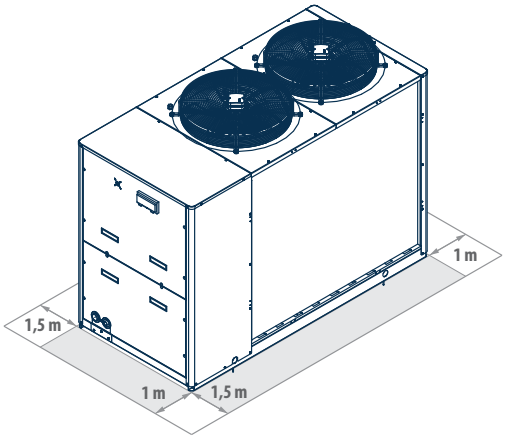

LEGEND	
1	Gas inlet Ø 42
2	Gas outlet Ø 22
3	Power supply, Ø 37 mm
4	Electric control board
5	Vibration dampers

Dimensional drawings

MTE 53 - 82

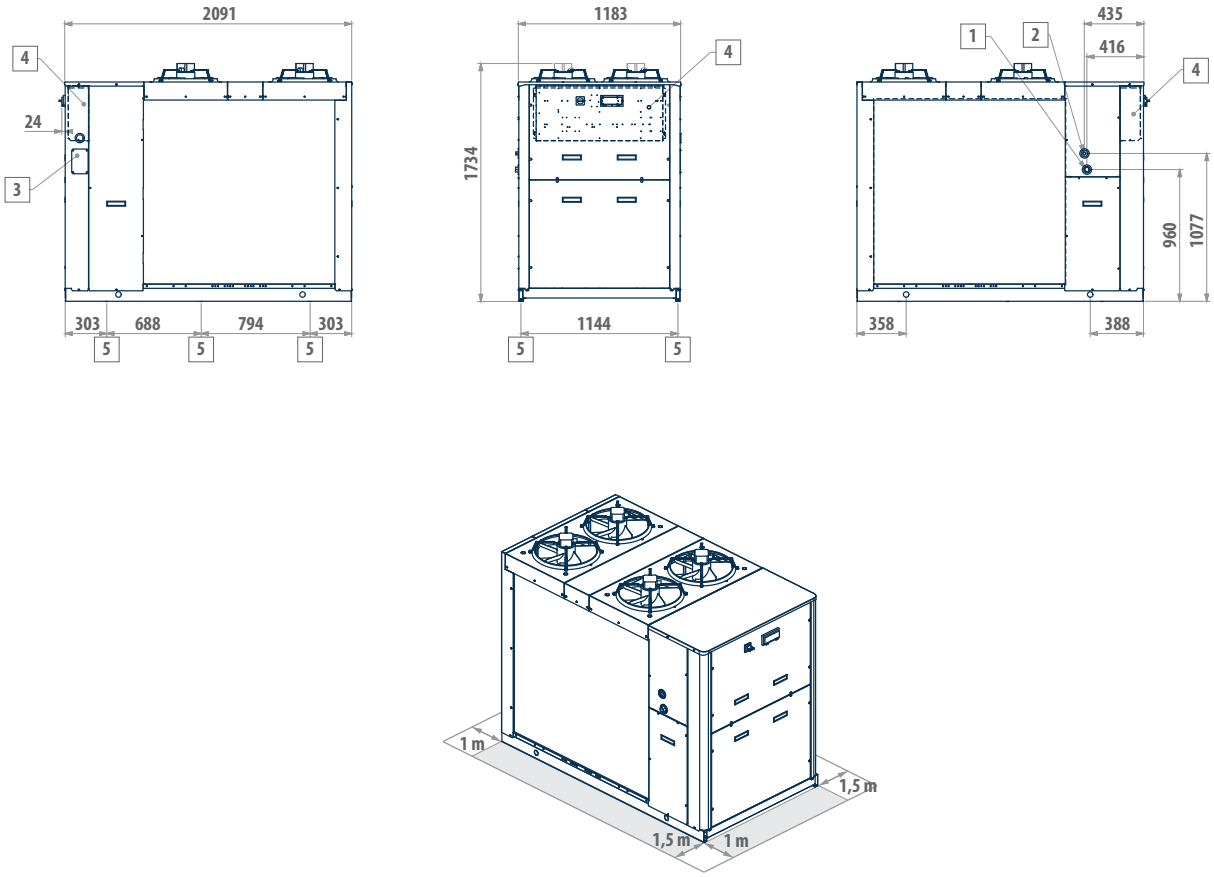

LEGEND	
1	Gas inlet Ø 35
2	Liquid outlet Ø 22
3	Power supply
4	Electric control board
5	Vibration dampers



Dimensional drawings

MTE 96 - 108

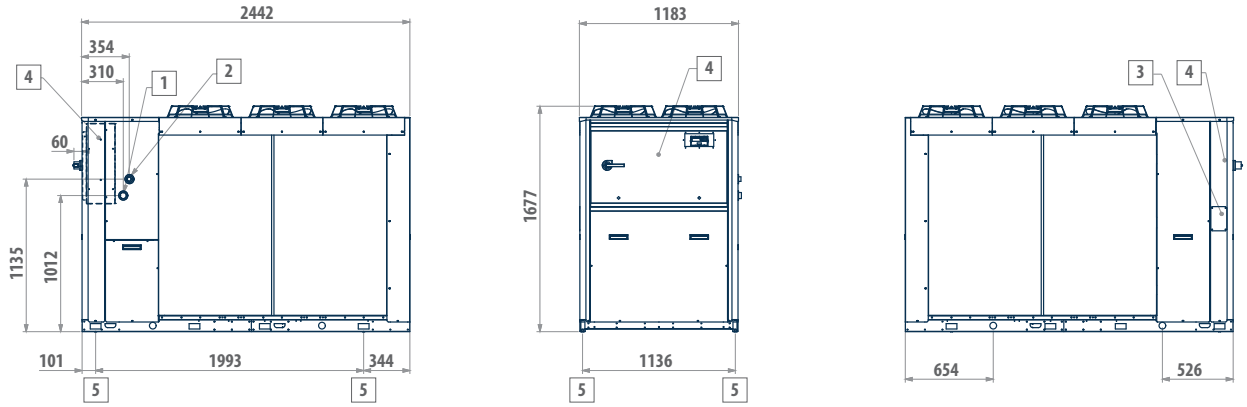

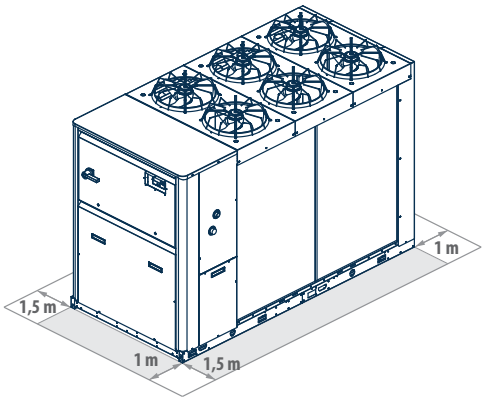

LEGEND	
1	Gas inlet Ø 45
2	Liquid outlet Ø 34
3	Power supply
4	Electric control board
5	Vibration dampers

Dimensional drawings

MTE 129 - 163

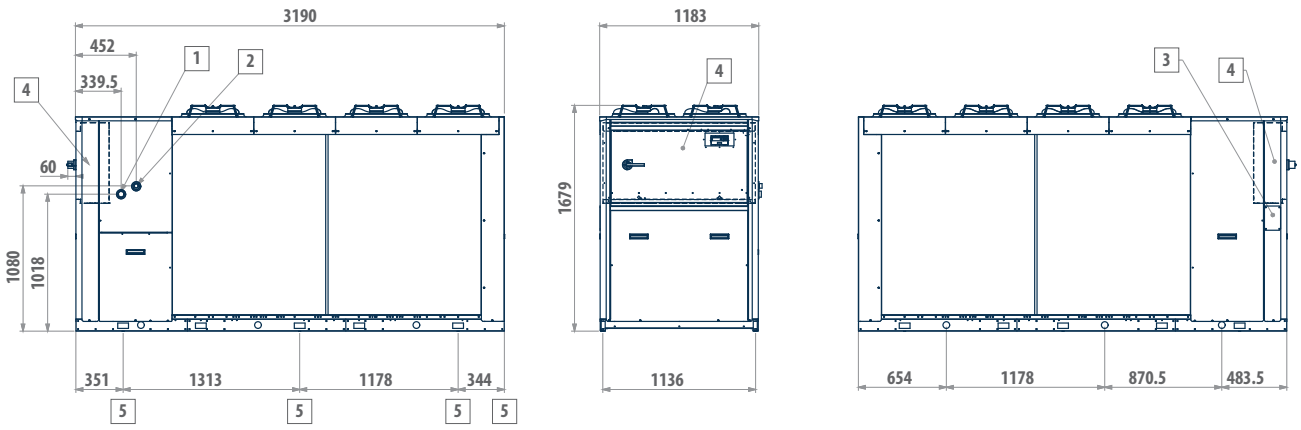

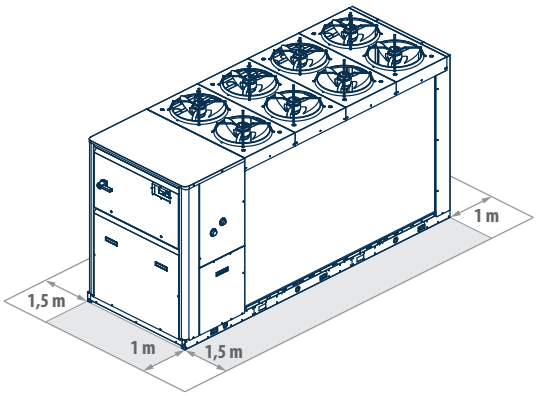

LEGEND	
1	Gas inlet Ø 45
2	Liquid outlet Ø 34
3	Power supply
4	Electric control board
5	Vibration dampers



Dimensional drawings

MTE 169 - 214

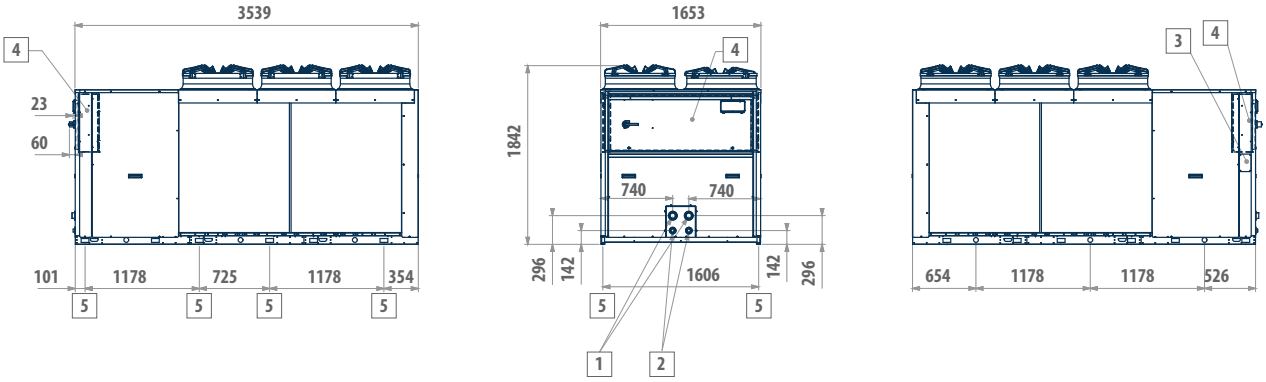

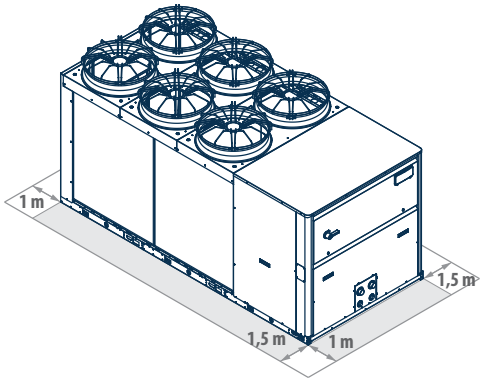

LEGEND	
1	Gas inlet Ø 58
2	Liquid outlet Ø 31
3	Power supply
4	Electric control board
5	Vibration dampers

Indoor motor-driven evaporating units

LER 40 - 420 kW





Scroll compressor | R-410A refrigerant | Cooling only | Split version

Compact and silent machines with remote dissipation into the air

The LER range consists of 19 models with a cooling capacity range from 40 to 420 kW and is available in a standard or silenced acoustic version.
The possibility of setting up different cooling circuits in units of the same power means being able to personalise efficiency levels under full or part load conditions and the redundancy. Three different efficiency packs are available:
- 1 cooling circuit, 2 compressors
- 2 cooling circuits, 2 compressors
- 2 cooling circuits, 4 compressors

The LER units are developed in a completely enclosed version for a low noise operation making it possible to install them in non-segregated environments. They are characterized by a rounded shape contributing to an attractive appearance.
The possibility of keeping the evaporator indoors means there is no need to add glycol to the water inside the system, which brings clear benefits in terms of thermodynamic efficiency, protection against corrosion and respect for the environment. In addition, you can keep all components requiring maintenance in an easily accessible room.
In air-conditioning applications it is often requested to have heat available for heating sanitary water or controlling post-heating in air-handling units where independent temperature and humidity control is required. all the cooling only units of the LER series are available on request with desuperheater for partial heat recovery; the available thermal power, which can, for example, be used to produce domestic hot water or for post-heating heat exchangers, depends on the unit's operating conditions.

PLUS

- Electronic expansion valve
- Up to 4 compressors
- 1 or 2 cooling circuits
- Remote connectivity with the most common protocols
- Compact dimensions
- Low noise levels due to the panelling

The LER units and the remote heat sink are connected with refrigerant lines whose length can exceed the conventional limits by using a specific kit for oil recovery and creating siphons distributed on the lines.

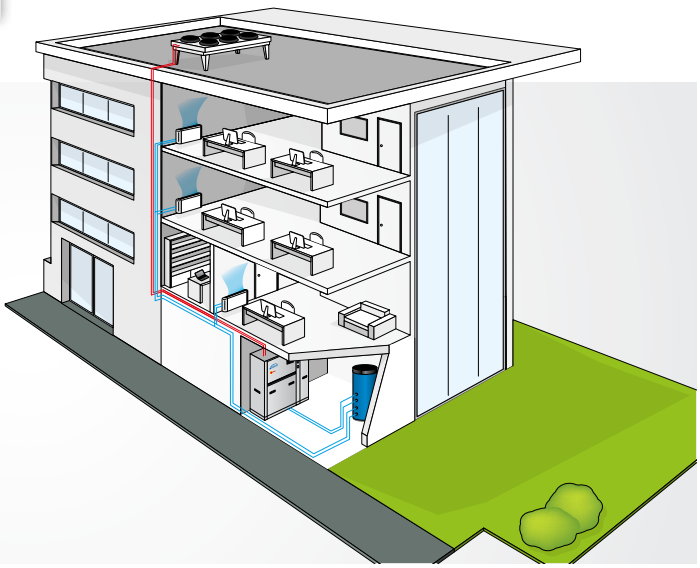



MAIN COMPONENTS

Structure

Made in galvanised steel sheet with a polyester powder coating for outdoors.
The compressor compartment is completely sealed and may be accessed on 3 sides thanks to easy-to-remove panels that greatly simplify maintenance and/or inspection.

Scroll compressors

Scroll compressors are now the best solution in terms of reliability and sound power emitted. The compressors are supplied complete with motor protection against overheating, overcurrents and excessive outlet gas temperatures.

Heat exchanger

Heat exchangers with braze-welded AISI 316 austenitic stainless steel plates and connections made of AISI 316 L, characterised by a reduced carbon content to facilitate brazing.



Cooling circuit

It can be made in three different versions with the same power (Efficiency Pack), using mainly:
- R410A scroll compressors
- braze-welded plate exchangers
- electronic expansion valves



Electronic microprocessor controller

It allows complete management of the unit. The electronic control system allows the setpoint to be adjusted automatically according to the outdoor temperature in order to reduce consumption and broaden the working temperature range. With the advanced microprocessor control it is possible to set up LAN networks for controlling 4 units in parallel.

CONFIGURATION

The models are completely configurable by selecting the version and the options. To the right is shown an example of configuration.

Version	Fields ▶	1	2	3	4	5	6	7	8	9	10
LER062CS		0	B	0	0	0	1	G	0	0	0

To verify the compatibility of the options, use the selection software or the price list.

AVAILABLE VERSIONS

Cooling only versions

LER..CS	Standard execution
LER..CL	Low noise execution

CONFIGURATION OPTIONS

1 - POWER SUPPLY
- **0** 400/3/50 + N
- **2** 400/3/50 + N + Circuit breakers

2 - CONTROL MICROPROCESSOR AND THERMAL EXPANSION VALVE
- **0** Base + electronic expansion valve
- **A** Base + mechanical expansion valve
- **B** Programmable (LCD 8x22 display) + electronic expansion valve
- **C** Programmable (LCD 8x22 display) + mechanical expansion valve

3 - PARTIAL HEAT RECOVERY (condensation control option is mandatory)
- **0** Absent
- **D** Desuperheater (40% of cooling capacity recovery in rated conditions)

4 - AIR FLOW MODULATION OF REMOTE UNIT
- **0** Absent
- **C** Condensation control with fan adjusted by potentiometer
- **P** Condensation control with 1-10V modulated output signal

5 – AIR FLOW MODULATION USER SIDE
- **0** Absent
- **D** Air flow modulation with output signal in ΔT logic = cost
- **T** Air flow modulation with output signal in T logic = cost

6 - REMOTE COMMUNICATION
- **0** Absent
- **1** RS485 Serial board (Modbus or Carel protocol)
- **2** Lonworks serial board
- **3** GSM modem kit
- **4** Ethernet card (SNMP or BACNET protocol) + clock card
- **5** Ethernet card + clock card + supervision software

7 - VIBRATION ISOLATION
- **0** Absent
- **G** Rubber vibration dampers at the base of the unit
- **M** Spring vibration dampers at the base of the unit

8 - PACKING
- **0** Standard
- **1** Wooden crate
- **2** Wooden case

9 - REMOTE CONTROL
- **0** Absent
- **1** Simplified remote control panel
- **2** Remote display for base microprocessor
- **3** Remote display for programmable microprocessor

10 - CONFIGURATION FOR LONG REFRIGERANT CIRCUITS
- **0** Absent
- **1** Oil recovery kit for refrigerant lines > 30 m (not for efficiency pack 1)

ACCESSORIES

- **A** Power factor correction capacitors
- **B** Soft-starter kit
- **C** Service kit (kit of sensors for quick diagnosis)
- **D** Clock card
- **E** ON/OFF status of the compressors
- **F** Remote contact for power step limits
- **G** Configurable digital alarm card
- **H** Pressure gauges
- **I** Pair of Victaulic couplings for quick water IN-OUT connection
- **L** Regulating filter kit (solenoid and tap on the liquid line)
- **M** Outdoor temperature probe for setpoint compensation
- **N** Normative reference other than "97/23/CE - PED"
- **P** Unit lifting kit

Rated technical data of LER motor-driven evaporating units

LER CS / CL		41	42	51	52	61	62	71	72	81
Cooling capacity (1)	kW	42,4	42,4	50,2	50,2	56,9	56,9	65,2	65,2	74,1
Total power input (1)	kW	13,1	13,1	15,4	15,4	17,2	17,2	19,8	19,8	22,1
EER (1)		3,24	3,24	3,25	3,25	3,30	3,30	3,30	3,30	3,36
Water flow rate (1)	l/h	7286	7286	8636	8636	9785	9785	11218	11218	12738
Water Pressure drop (1)	kPa	27	27	37	37	30	30	37	37	29
Power supply	V - ph - Hz	400-3N-50								
n° of scroll compressor/ circuits	Nr,	2 / 2	2 / 1	2 / 2	2 / 1	2 / 2	2 / 1	2 / 2	2 / 1	2 / 2
LER-CS: Sound power level (2)	dB(A)	69	69	69	69	69	69	70	70	70
LER-CL: Sound power level (2)	dB(A)	67	67	67	67	67	67	68	68	68

LER CS / CL		82	91	92	111	112	131	132
Cooling capacity (1)	kW	74,1	82,9	82,9	99,6	99,6	114	114
Total power input (1)	kW	22,1	25,0	25,0	29,5	29,5	34,0	34,0
EER (1)		3,36	3,32	3,32	3,38	3,38	3,36	3,36
Water flow rate (1)	l/h	12738	14261	14261	17138	17138	19642	19642
Water Pressure drop (1)	kPa	29	35	35	30	30	37	37
Power supply	V - ph - Hz	400-3N-50						
n° of scroll compressor/ circuits	Nr,	2 / 1	2 / 2	2 / 2	2 / 2	2 / 1	2 / 2	2 / 1
LER-CS: Sound power level (2)	dB(A)	70	70	70	71	71	71	71
LER-CL: Sound power level (2)	dB(A)	68	68	68	69	69	69	69

LER CS / CL		141	142	144	161	162	164	181	182	184
Cooling capacity (1)	kW	131	131	131	147	147	147	172	172	172
Total power input (1)	kW	38,9	38,9	38,9	43,9	43,9	43,9	51,4	51,4	51,4
EER (1)		3,37	3,37	3,37	3,34	3,34	3,34	3,34	3,34	3,34
Water flow rate (1)	l/h	22553	22553	22553	25229	25229	25229	29501	29501	29501
Water Pressure drop (1)	kPa	35	35	35	38	38	38	40	40	38
Power supply	V - ph - Hz	400-3N-50								
n° of scroll compressor/ circuits	Nr,	2 / 2	2 / 1	4 / 2	2 / 2	2 / 1	4 / 2	2 / 2	2 / 1	4 / 2
LER-CS: Sound power level (2)	dB(A)	73	73	73	73	73	73	73	73	73
LER-CL: Sound power level (2)	dB(A)	71	71	71	71	71	71	71	71	71

LER CS / CL		204	214	244	284	314	344	374	424
Cooling capacity (1)	kW	183	198	232	265	295	317	344	379
Total power input (1)	kW	54,5	59,0	68,0	77,9	87,7	95,2	103	112
EER (1)		3,36	3,35	3,41	3,40	3,36	3,33	3,35	3,38
Water flow rate (1)	l/h	31495	33980	39890	45594	50692	54579	59134	65219
Water Pressure drop (1)	kPa	38	43	24	31	37	42	40	42
Power supply	V - ph - Hz	400-3N-50							
n° of scroll compressor/ circuits	Nr.	4 / 2	4 / 2	4 / 2	4 / 2	4 / 2	4 / 2	4 / 2	4 / 2
LER-CS: Sound power level (2)	dB(A)	73	73	73	73	73	75	75	75
LER-CL: Sound power level (2)	dB(A)	71	71	71	71	71	73	73	73

(1) Outdoor air temperature 35°C, condensation temperature 50°C
(2) Sound power level measured according to UNI EN ISO 9614



Dimensional drawings

LER 42 - 92

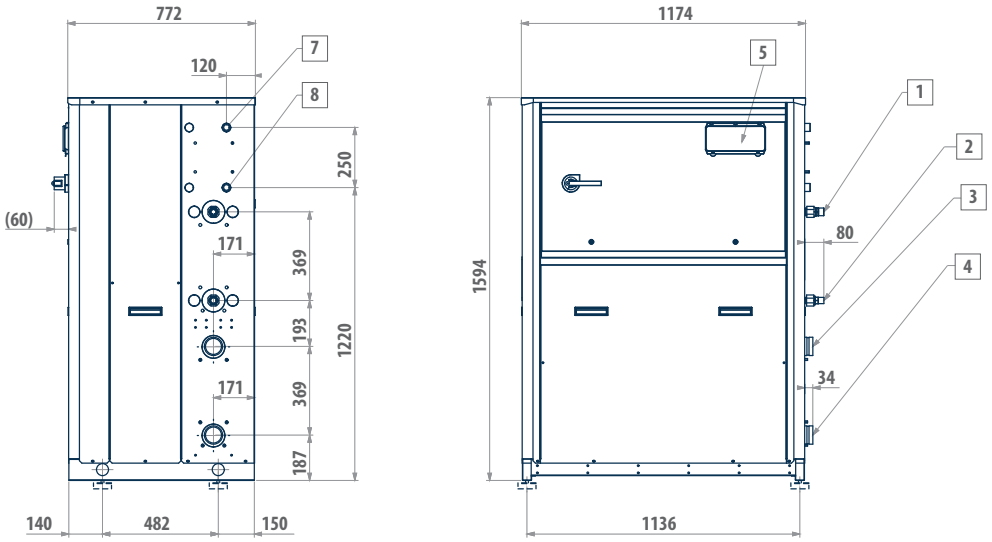

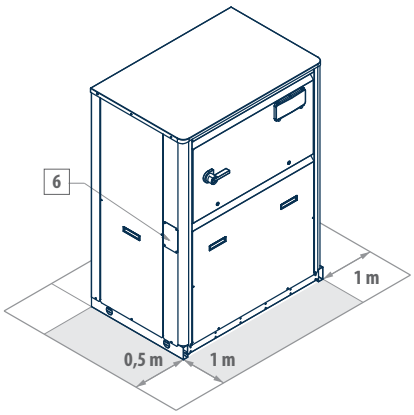

Model	Version
LER 42	S-L
LER 52	S-L
LER 62	S-L
LER 72	S-L
LER 82	S-L
LER 92	S-L

LEGEND	
1	Air outlet, refrigerant side (Ø 28)
2	Air intake, refrigerant side (Ø 22)
3	User circuit inlet (Victaulic 2" ½)
4	User circuit outlet (Victaulic 2" ½)
5	User interface
6	Power supply input
7	Optional heat recovery water outlet (1")
8	Optional heat recovery water inlet (1")

Dimensional drawings

LER 41 - 91

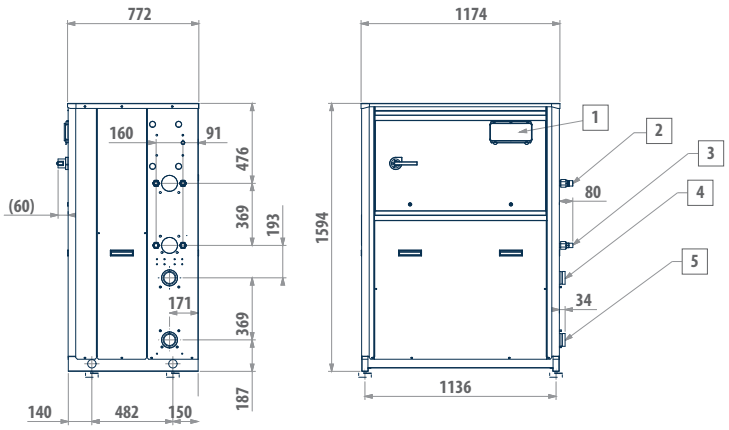

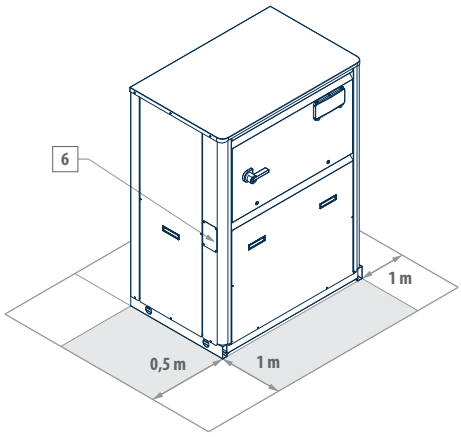

Model	Version
LER 41	S-L
LER 51	S-L
LER 61	S-L
LER 71	S-L
LER 81	S-L
LER 91	S-L

LEGEND	
1	User interface
2	Air outlet, refrigerant side (Ø 22)
3	Liquid return (Ø 16)
4	User circuit inlet (Victaulic 2"½)
5	User circuit outlet (Victaulic 2"½)
6	Power supply input



Dimensional drawings

LER 112 - 182

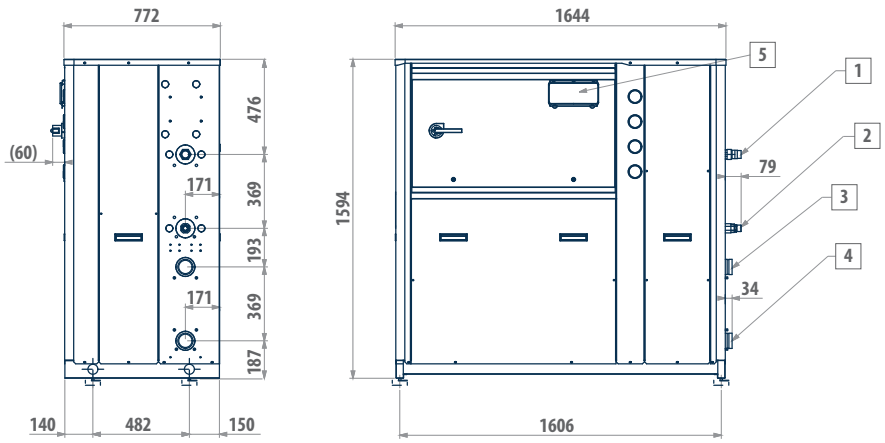

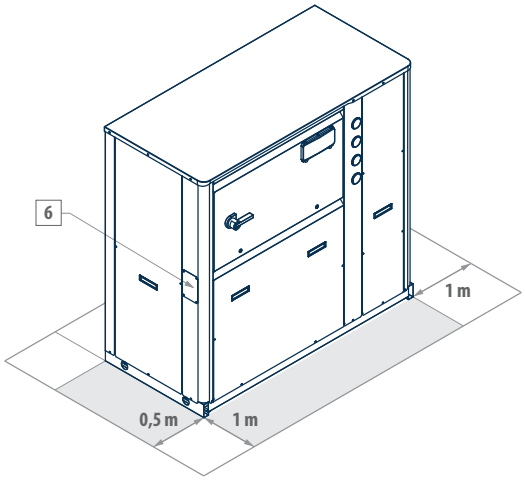

Model	Version
LER 112	S-L
LER 132	S-L
LER 142	S-L
LER 162	S-L
LER 182	S-L

LEGEND	
1	Air outlet, refrigerant side (Ø 35)
2	Air intake, refrigerant side (Ø 35)
3	User circuit inlet (Victaulic 2" ½)
4	User circuit outlet (Victaulic 2" ½)
5	User interface
6	Power supply input

Dimensional drawings

LER 111 - 181

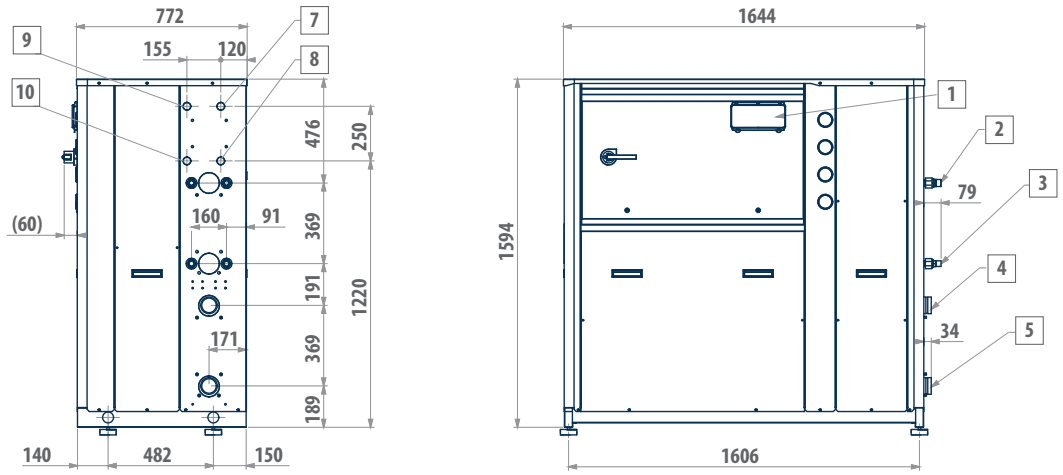

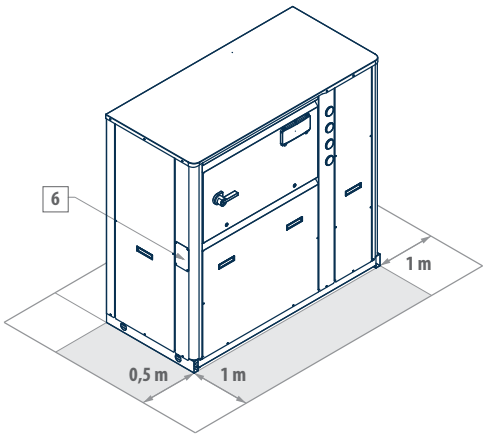

Model	Version
LER 111	S-L
LER 131	S-L
LER 141	S-L
LER 161	S-L
LER 181	S-L

LEGEND	
1	User interface
2	Air outlet, refrigerant side (Ø 28)
3	Liquid return (Ø 22)
4	User circuit inlet (Victaulic 2"½)
5	User circuit outlet (Victaulic 2"½)
6	Power supply input
7	Optional heat recovery water outlet (1") - circ. 2
8	Optional heat recovery water inlet (1") - circ. 2
9	Optional heat recovery water outlet (1") - circ. 1
10	Optional heat recovery water inlet (1") - circ. 1



Dimensional drawings

LER 144 - 214

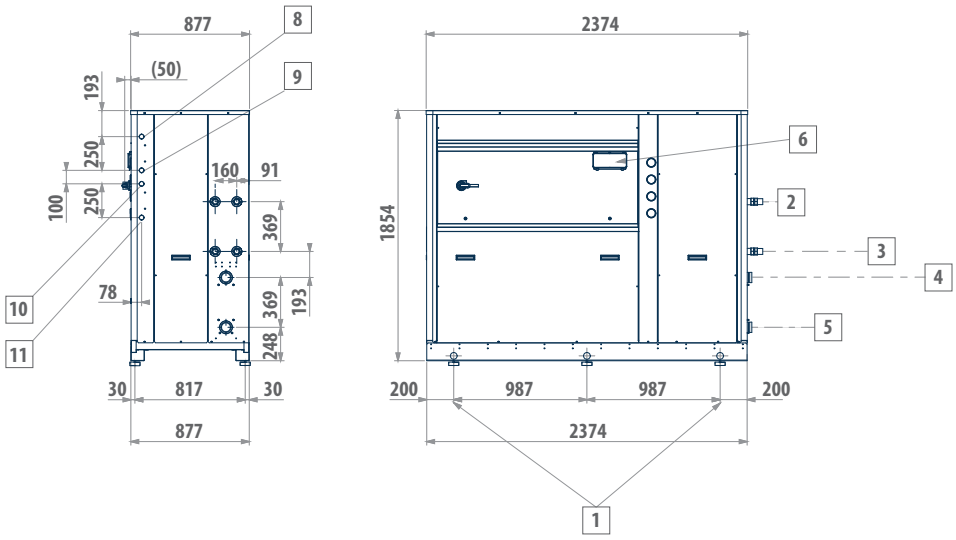

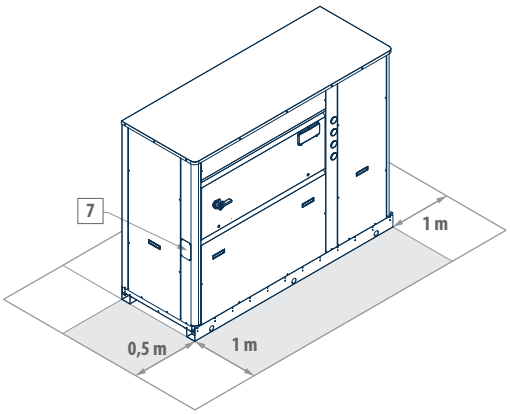

Model	Version
LER 144	S-L
LER 164	S-L
LER 184	S-L
LER 204	S-L
LER 214	S-L

LEGEND	
1	Fastening points
2	Air outlet, refrigerant side (Ø 42)
3	Liquid return (Ø 35)
4	User circuit inlet (Victaulic 2"½)
5	User circuit outlet (Victaulic 2"½)
6	User interface
7	Power supply input
8	Optional heat recovery water outlet (1") - circ. 1
9	Optional heat recovery water inlet (1") - circ. 1
10	Optional heat recovery water outlet (1") - circ. 2
11	Optional heat recovery water inlet (1") - circ. 2

Dimensional drawings

LER 244 - 424

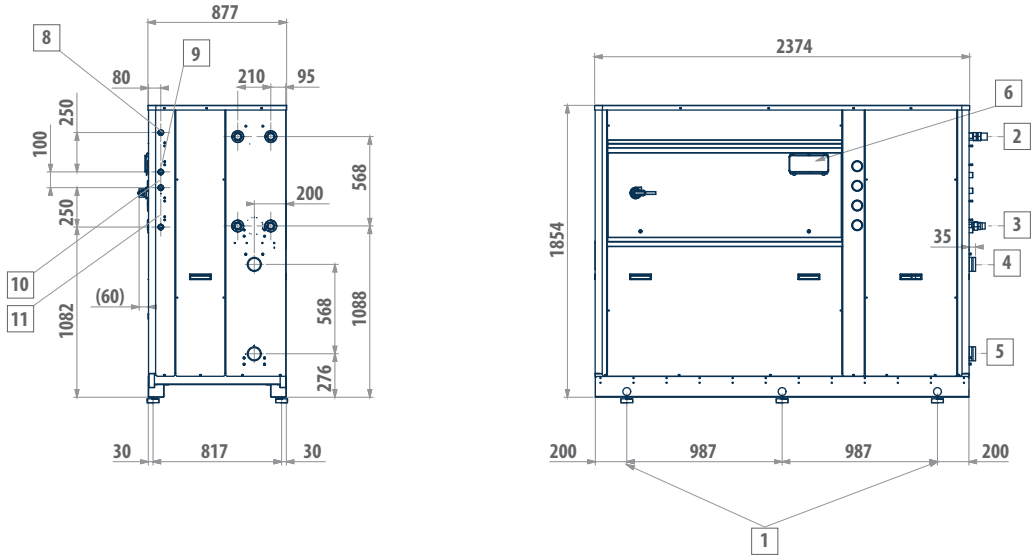

Model	Version
LER 244	S-L
LER 284	S-L
LER 314	S-L
LER 344	S-L
LER 374	S-L
LER 424	S-L

LEGEND	
1	Fastening points
2	Air outlet, refrigerant side (Ø 42)
3	Liquid return (Ø 35)
4	User circuit inlet (Victaulic 3")
5	User circuit outlet (Victaulic 3")
6	User interface
7	Power supply input
8	Optional heat recovery water outlet (1") - circ. 1
9	Optional heat recovery water inlet (1") - circ. 1
10	Optional heat recovery water outlet (1") - circ. 2
11	Optional heat recovery water inlet (1") - circ. 2



Indoor air/water chiller and heat pumps for ducted installation

MCC 5 - 37 kW





Centrifugal fans | Scroll compressor | R-410A refrigerant | Cooling only | Cooling / Heating | Packaged unit

PLUS

- Direct coupling of the centrifugal fans to the electric motor without any pulleys or belts.
- Fan available static pressure up to 100 Pa
- Possibility of inspecting the ventilation compartment while the machine is in operation
- Condensation control, standard option
- Hydraulic pump cooled by outside air by means of special grille

The self-adaptive ductable machine

The series features 10 models in cooling only version, and cooling capacity ranging from 5 to 37 kW, and 10 models with reversible heat pump, and heating capacity ranging from 6 to 41 kW. The centrifugal fans guarantee ducting of air delivery for indoor installation, making it possible to achieve extremely low noise emissions.
The design of the MCC series uses R410A as the refrigerant, which allows the use of finned block heat exchangers with 8mm pipes to minimize air side head loss.
The design philosophy places a priority on compactness, "plug & play" solutions and easy access to all the components. The logic of the plug&play water system, already in the DNA of the whole line of Galletti air-water units, is combined here with the innovative plug&play ventilation system philosophy.
The latter consists of the self-adaptation of the air flow rate depending on the head loss of the expulsion ducts and depending on the intake air temperature.The units are supplied with air flow rate adaptive controls with continuous modulation of the speed in order to drastically reduce setup times.
Air delivery can be configured vertically or horizontally (optional).
Plug & play water system:
To enable immediate application of MCC to the system, 3 different hydronic kits are available:

The centrifugal fans guarantee ducting of air delivery for installation in equipment compartment

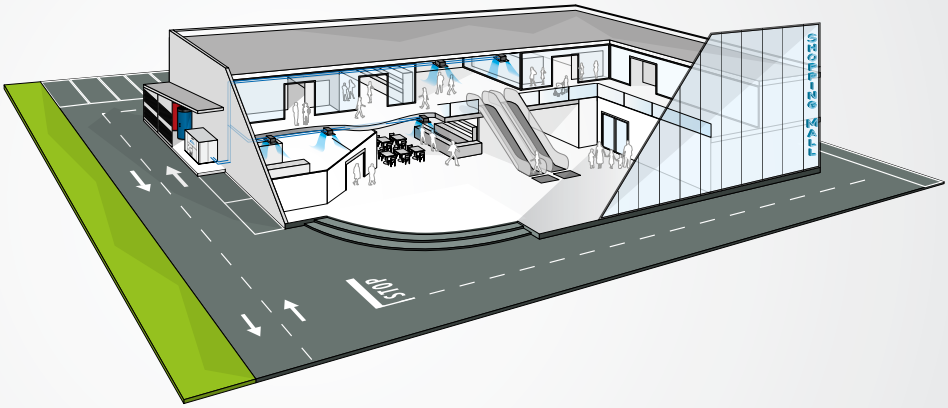



MAIN COMPONENTS

Structure

Galvanised sheet steel supporting base and enclosing panels made of Peraluman to ensure effective protection against corrosive agents.
The ventilation compartment is separated from the compressor compartment of the unit, for inspection purposes when the unit is working.



Customised hydraulic kit

The hydraulic circuit can be comprised of:
- high head pump with stainless steel impeller, equipped with thermal protection, designed for use with mixtures of water and glycol up to a concentration of 30% glycol;
- expansion tank
- safety valve (6 bar)
- automatic filling unit
- automatic vent valve
- water differential pressure switch and outlet water temperature probe with anti-freeze thermostat function
- buffer tank of the hydraulic circuit outlet side.

Ventilation section

Statically and dynamically balanced centrifugal fans with forward-curving blades, directly mounted on the electric motor.
All units are equipped with phase-cut speed regulator controlled by the pressure probe.



Finned block heat exchanger

The special engineering of the heat exchangers allows defrost cycles to be carried out at maximum speed in the models with heat pump operation, which brings clear benefits in terms of the integrated efficiency of the whole operating cycle.

CONFIGURATION

The models are completely configurable by selecting the version and the options. To the right is shown an example of configuration.

Version	Fields ▶	1	2	3	4	5	6	7	8	9	10	11	12	13
MCC022C0AB		0	1	S	0	C	0	0	M	0	0	F	2	0

To verify the compatibility of the options, use the selection software or the price list.

AVAILABLE VERSIONS

Cooling only versions
MCC...C0AB Unit with 400V - three-phase - 50 Hz power supply
MCC...C2AB Unit with 400V - three-phase - 50 Hz power supply + circuit breakers
MCC..CMAB Unit with 230V - single phase - 50 Hz power supply

Versions with reversible heat pump
MCC...H0AB Unit with 400V - three-phase - 50 Hz power supply
MCC...H2AB Unit with 400V - three-phase - 50 Hz power supply + circuit breakers
MCC..HMAB Unit with 230V - single phase - 50 Hz power supply

CONFIGURATION OPTIONS

1 - EXPANSION VALVE
- **0** Traditional
- **A** Electronic 230V

2 – WATER PUMP
- **0** Absent
- **1** Pump and expansion tank

3 - INERTIAL BUFFER TANK
- **0** Absent
- **S** Present

4 - PARTIAL HEAT RECOVERY
- **0** Absent
- **D** Desuperheater

5 - AIR FLOW MODULATION
- **C** Condensation control with fans adjusted by potentiometer

6 - ANTIFREEZE KIT
- **0** Absent
- **E** Present, units with evaporator only
- **P** Present, units with evaporator, pump and expansion tank
- **Q** Present, units with evaporator and tank
- **S** Present, units with evaporator, pump, expansion tank and tank

7 - REMOTE CONTROL PANEL
- **0** Absent
- **S** Simplified remote control
- **M** Remote control for µChiller2 (to be specified on order)

8 - COOLING ACCESSORIES
- **0** None
- **M** Pressure gauges

9 - REMOTE COMMUNICATION
- **0** Absent
- **2** RS485 x ERGO (modbus included)

10 -SPECIAL HEAT EXCHANGERS
- **0** Standard
- **R** Copper / copper exchangers
- **C** Cataphoresis
- **B** Fins pre-coated with epoxy paint

11 – HEAT EXCHANGER OPTIONS
- **0** None
- **R** Protection net
- **F** Metal filter

12 - COMPRESSOR OPTIONS
- **0** Absent
- **1** Power factor correction capacitors
- **2** Soft starter
- **3** Power factor correction capacitors + soft starter

13 - CONTROL PANEL
- **0** Base microprocessor control

ACCESSORIES

- Straight outlet connector
- Horizontal air outlet
- Flanged water connections
- Base vibration dampers
- Vibration dampers - air outlet
- Simplified remote control
- Heat exchanger protection net
- Heat exchanger metal filter
- MYCHILLER BASE (RS485 is a mandatory accessory)
- MYCHILLER PLUS (RS485 is a mandatory accessory)

MCC C Rated technical data

MCC-C		06	06M	07	07M	09	09M
Power supply	V-ph-Hz	400-3N-50	230-1-50	400-3N-50	230-1-50	400-3N-50	230-1-50
Cooling capacity (1) (E)	kW	5,46	5,46	6,68	6,59	8,77	8,69
Power supply (1) (E)	kW	2,57	2,61	2,99	3,16	4,45	4,73
EER (1) (E)		2,17	1,97	1,84	2,17	1,97	1,84
ESEER (E)		2,59	2,69	2,58	2,59	2,69	2,58
Eurovent efficiency class		D	E	F	D	E	F
Water flow (1)	l/s	0,27	0,33	0,44	0,27	0,33	0,44
Water pressure drop (1) (E)	kPa	<5	<5	<5	<5	34	33
Available pressure head (1)	kPa	57	55	155	57	55	155
Maximum current absorption	A	17	19	34	8	10	17
Start up current	A	62	83	100	33	36	51
Start up current with softstarter kit	A	24	24	26	26	38	38
nr. of compressors / circuits		1/1	1/1	1/1	1/1	1/1	1/1
nr. of fans		1	1	1	1	1	1
Air flow	m^3/h	2500	2500	2500	2500	5500	5500
Maximum available static pressure	Pa	91	85	140	91	85	135
Expansion vessel	dm^3	1	1	5	1	1	5
Water tank volume	dm^3	20	20	20	20	36	36
Sound power level (2) (E)	dB(A)	70	70	70	70	73	81
Transport weight	kg	160	165	220	160	165	220
Operating weight	kg	168	178	239	168	178	239

MCC-C		12	15	18	22	25	33	37
Power supply	V-ph-Hz	400-3N-50	400-3N-50	400-3N-50	400-3N-50	400-3N-50	400-3N-50	400-3N-50
Cooling capacity (1) (E)	kW	11,8	13,7	17,0	21,2	25,3	32,9	36,4
Power supply (1) (E)	kW	5,42	6,36	7,63	9,10	11,1	15,2	17
EER (1) (E)		2,17	2,15	2,23	2,33	2,27	2,17	2
ESEER (E)		2,67	2,76	2,97	3,02	2,58	2,67	3
Eurovent efficiency class		D	D	D	C	D	D	D
Water flow (1)	l/s	0,57	0,70	0,86	1,07	1,22	1,58	1,75
Water pressure drop (1) (E)	kPa	38	51	35	37	48	41	38
Available pressure head (1)	kPa	148	125	136	118	123	123	121
Maximum current absorption	A	19	20	23	25	28	35	38
Start up current	A	67	77	104	114	135	163	200
Start up current with softstarter kit	A	49	56	76	83	99	120	146
nr. of compressors / circuits		1/1	1/1	1/1	1/1	1/1	1/1	1/1
nr. of fans		1	1	1	1	2	2	2
Air flow	m^3/h	5500	5500	6500	6500	11000	13000	13000
Maximum available static pressure	Pa	130	120	120	110	125	95	90
Expansion vessel	dm^3	5	5	5	5	8	8	8
Water tank volume	dm^3	36	36	96	96	155	155	155
Sound power level (2) (E)	dB(A)	70	70	70	70	73	81	81
Transport weight	kg	228	240	295	301	405	430	440
Operating weight	kg	248	260	375	381	546	572	583

(1) Water temperature 12/7 °C, outdoor air temperature 35 °C (UNI EN 14511:2011)
(2) Sound power level measured according to UNI EN ISO 9614
(E) EUROVENT certified data



MCC H Rated technical data

MCC-H		06	06M	07	07M	09	09M
Power supply	V-ph-Hz	400-3N-50	230-1-50	400-3N-50	230-1-50	400-3N-50	230-1-50
Cooling capacity (1) (E)	kW	5,36	5,37	6,54	6,44	8,63	8,50
Power supply (1) (E)	kW	2,47	2,51	2,89	3,06	3,80	4,05
EER (1) (E)		2,17	2,14	2,26	2,10	2,27	2,10
ESEER (E)		2,59	2,70	2,34	2,50	2,70	2,34
Eurovent efficiency class		D	D	D	D	D	D
Water flow (1)	l/s	0,26	0,26	0,31	0,31	0,42	0,41
Water pressure drop (1) (E)	kPa	<5	<5	<5	<5	34	33
Available pressure head (1)	kPa	57	56	157	57	55	156
Heating capacity (2) (E)	kW	6,23	6,24	7,50	7,66	9,75	9,95
Power supply (2) (E)	kW	2,94	2,86	3,19	3,36	5,00	5,29
COP (2) (E)		2,12	2,18	2,35	2,28	1,95	1,88
Eurovent efficiency class		D	D	C	D	E	F
Water flow (2)	l/s	0,30	0,30	0,36	0,37	0,47	0,48
Water pressure drop (2) (E)	kPa	<5	<5	5	5	40	40
Available pressure head (2)	kPa	55	53	145	55	53	148
Maximum current absorption	A	17	19	34	8	10	17
Start up current	A	62	83	100	33	36	51
Start up current with softstarter kit	A	24	24	26	26	38	38
nr. of compressors / circuits		1/1	1/1	1/1	1/1	1/1	1/1
nr. of fans		1	1	1	1	1	1
Air flow	m^3/h	2500	2500	2500	2500	5500	5500
Maximum available static pressure	Pa	91	85	140	91	85	135
Expansion vessel	dm^3	1	1	5	1	1	5
Water tank volume	dm^3	20	20	20	20	36	36
Sound power level (3) (E)	dB(A)	70	70	70	70	73	81
Transport weight	kg	170	180	240	170	180	240
Operating weight	kg	173	183	260	173	183	260

(1) Water temperature 12/7 °C, outdoor air temperature 35 °C (UNI EN 14511:2011)
(2) Water temperature 40/45 °C, outdoor air temperature 7 °C D.B. - 6 °C W.B. (UNI EN 14511:2011)
(3) Sound power level measured according to UNI EN ISO 9614
(E) EUROVENT certified data

MCC H Rated technical data

MCC-H		12	15	18	22	25	33	37
Power supply	V-ph-Hz	400-3N-50	400-3N-50	400-3N-50	400-3N-50	400-3N-50	400-3N-50	400-3N-50
Cooling capacity (1) (E)	kW	11,5	13,4	16,6	20,7	24,8	32,2	35,6
Power supply (1) (E)	kW	4,73	5,61	7,36	8,86	10,7	14,8	16,2
EER (1) (E)		2,42	2,39	2,26	2,34	2,32	2,18	2,20
ESEER (E)		2,96	2,56	2,75	2,86	2,43	2,50	2,53
Eurovent efficiency class		C	C	D	C	C	D	D
Water flow (1)	l/s	0,55	0,65	0,80	1,00	1,19	1,55	1,71
Water pressure drop (1) (E)	kPa	38	51	35	40	48	41	38
Available pressure head (1)	kPa	150	128	138	121	125	125	124
Heating capacity (2) (E)	kW	12,6	15,2	18,6	23,5	28,5	36,7	41,5
Power supply (2) (E)	kW	6,03	6,87	7,94	9,44	12,6	15,5	17,0
COP (2) (E)		2,10	2,21	2,35	2,49	2,26	2,37	2,44
Eurovent efficiency class		D	D	C	C	D	C	C
Water flow (2)	l/s	0,60	0,73	0,89	1,12	1,36	1,76	1,99
Water pressure drop (2) (E)	kPa	43	61	42	50	59	49	48
Available pressure head (2)	kPa	139	116	128	107	111	112	109
Maximum current absorption	A	19	20	23	25	28	35	38
Start up current	A	67	77	104	114	135	163	200
Start up current with softstarter kit	A	49	56	76	83	99	120	146
nr. of compressors / circuits		1/1	1/1	1/1	1/1	1/1	1/1	1/1
nr. of fans		1	1	1	1	2	2	2
Air flow	m^3/h	5500	5500	6500	6500	11000	13000	13000
Maximum available static pressure	Pa	130	120	120	110	125	95	90
Expansion vessel	dm^3	5	5	5	5	8	8	8
Water tank volume	dm^3	36	36	96	96	155	155	155
Sound power level (3) (E)	dB(A)	81	81	82	82	83	85	87
Transport weight	kg	245	250	310	342	450	475	485
Operating weight	kg	265	270	388	436	601	627	638

(1) Water temperature 12/7 °C, outdoor air temperature 35 °C (UNI EN 14511:2011)
(2) Water temperature 40/45 °C, outdoor air temperature 7 °C D.B. - 6 °C W.B. (UNI EN 14511:2011)
(3) Sound power level measured according to UNI EN ISO 9614
(E) EUROVENT certified data



Dimensional drawings

MCC 06 - MCC 07

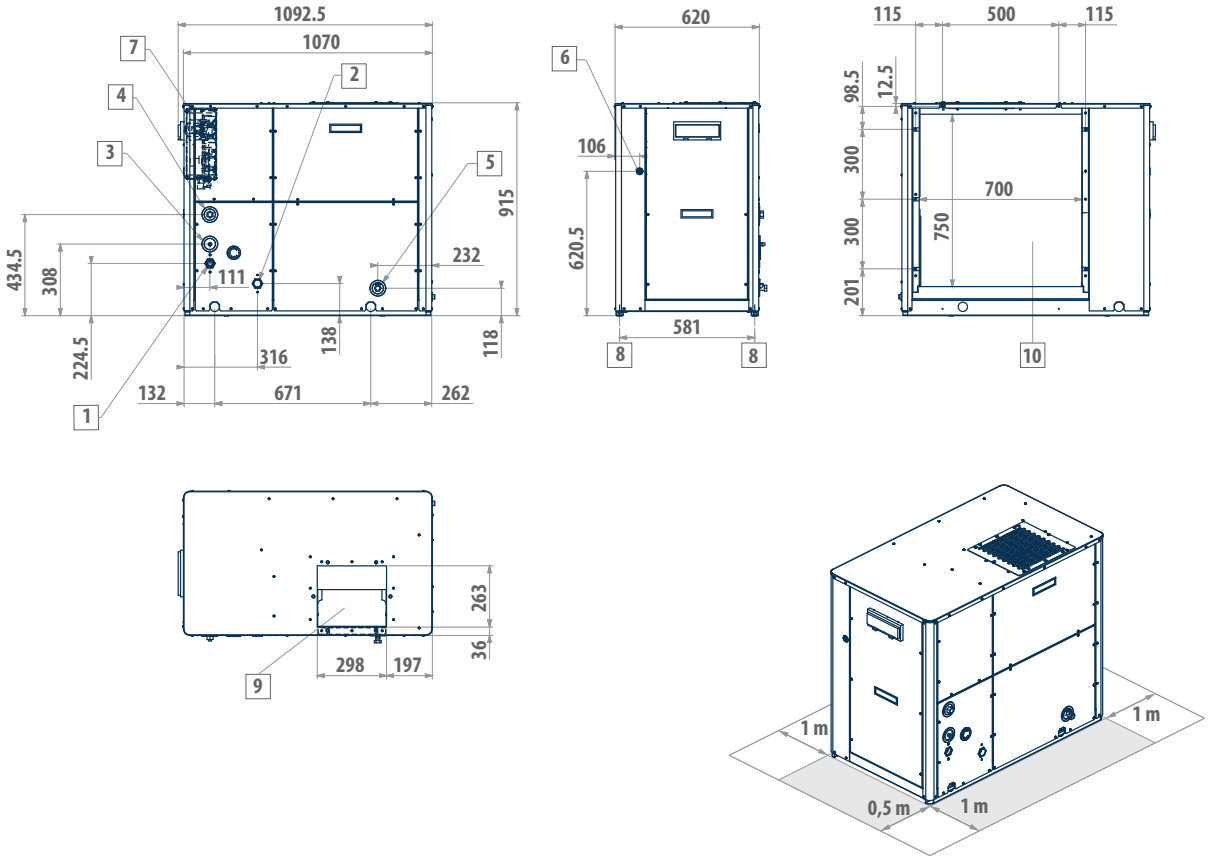

LEGEND	
1	Water inlet 1" female
2	Water outlet 1" female
3	Safety valve discharge outlet ½"
4	Water supply ½"
5	Water drainage ½"
6	Power supply, Ø 28 mm
7	Electric control board
8	Fastening points for vibration dampers
9	Air outlet
10	Air intake

Dimensional drawings

MCC 09 - MCC 12 - MCC 15

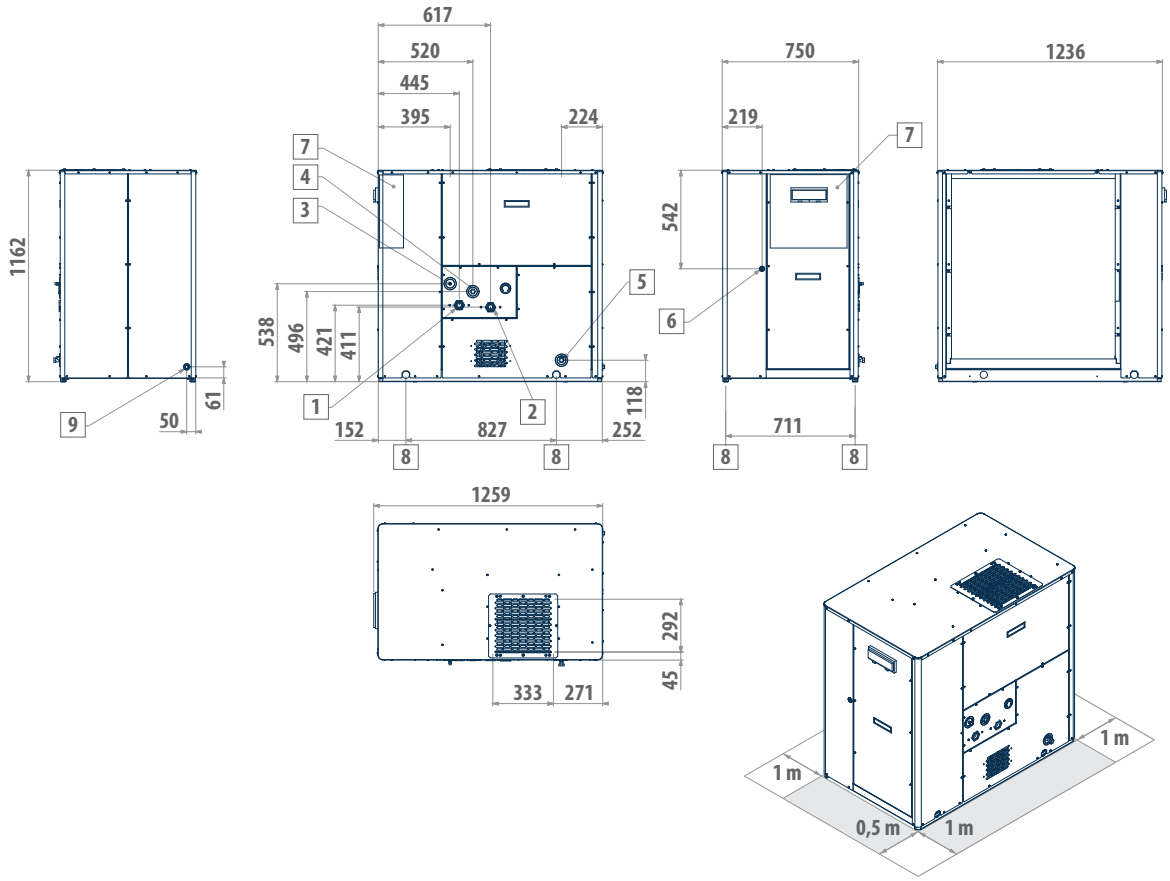

LEGEND	
1	Water inlet 1" ¼ female
2	Water outlet 1" ¼ female
3	Safety valve discharge outlet ½"
4	Water supply ½"
5	Water drainage ½"
6	Power supply, Ø 28 mm
7	Electric control board
8	Fastening points for vibration dampers
9	Air outlet
10	Air intake



Dimensional drawings

MCC 18 - MCC 22

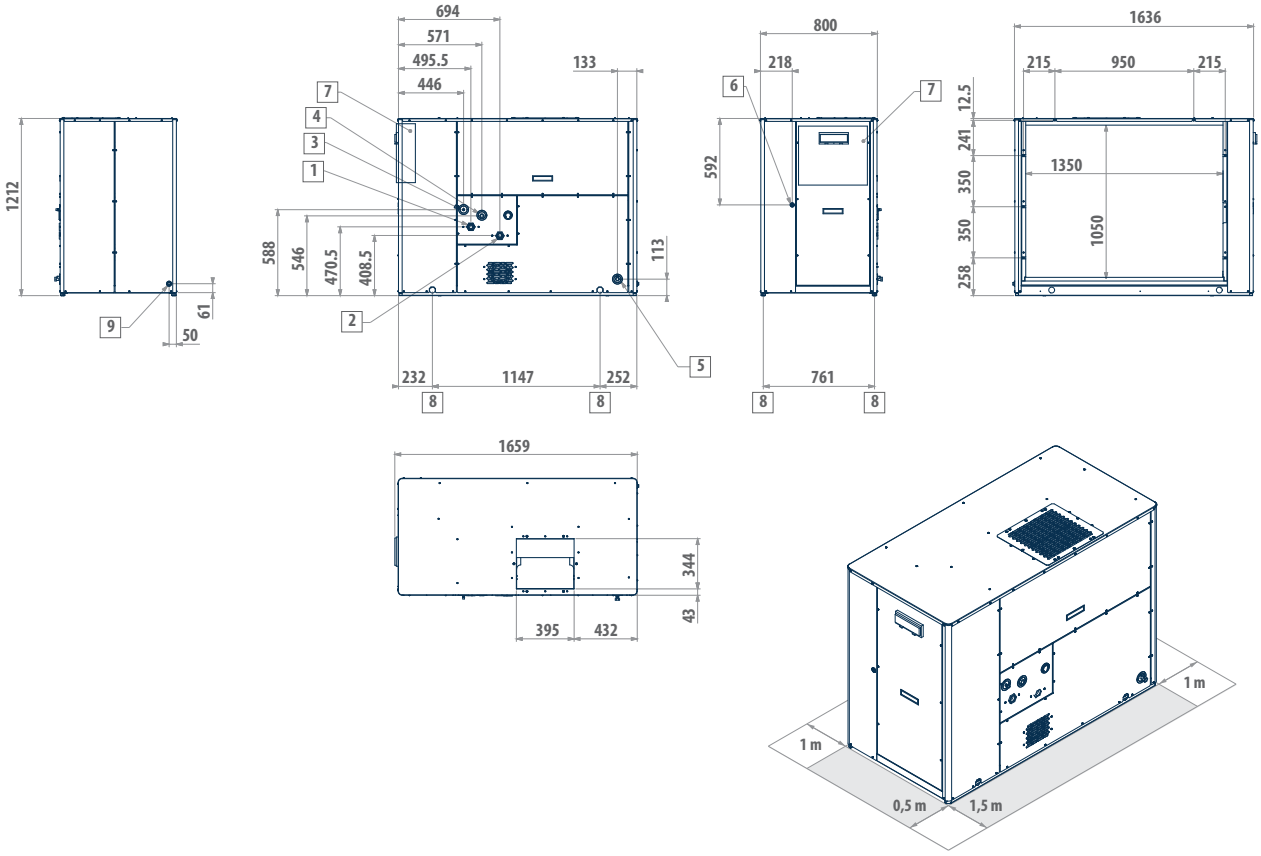

LEGEND	
1	Water inlet 1" ¼ female
2	Water outlet 1" ¼ female
3	Safety valve discharge outlet ½"
4	Water supply ½"
5	Water drainage ½"
6	Power supply, Ø 28 mm
7	Electric control board
8	Fastening points for vibration dampers
9	Air outlet
10	Air intake

Dimensional drawings

MCC 25 - MCC 33 - MCC 37

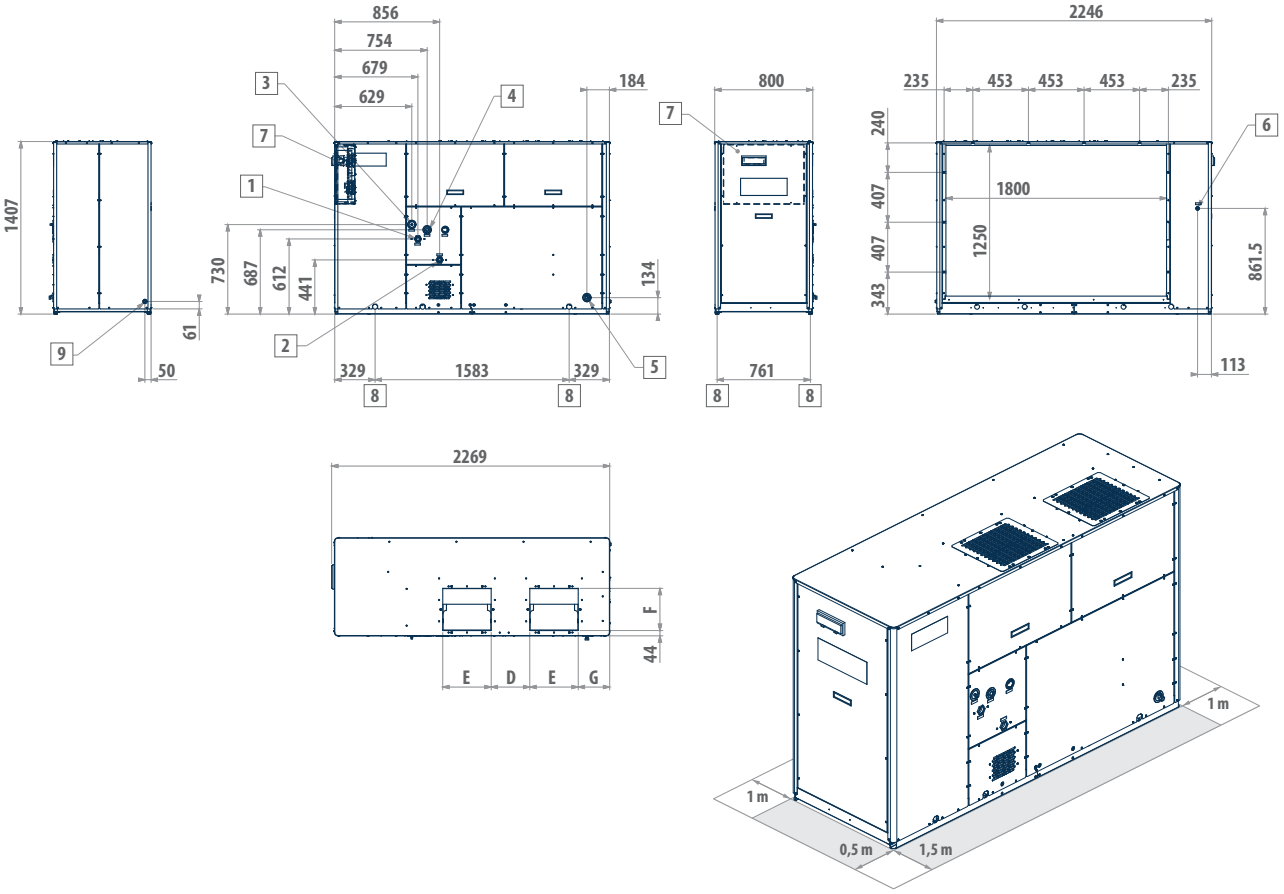

LEGEND	
1	Water inlet 1" ¼ female
2	Water outlet 1" ¼ female
3	Safety valve discharge outlet ½"
4	Water supply ½"
5	Water drainage ½"
6	Power supply, Ø 28 mm
7	Electric control board
8	Fastening points for vibration dampers
9	Air outlet
10	Air intake



Galletti
AIR CONDITIONING



WATER/WATER CHILLERS AND HEAT PUMPS

Introduction	p. 240
MCW	p. 242
LEW	p. 248

Galletti
AIR CONDITIONING



WATER/WATER CHILLERS AND HEAT PUMPS

GEOTHERMAL ENERGY

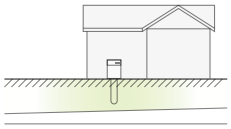

HYDROTHERMAL ENERGY

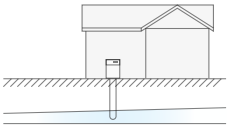

A complete offer ranging from 5 to 700 kW, suitable for every type of source

The possibility of using water to receive condensation heat from a chilling unit or using water as an energy source for a heat pump, represents an important opportunity to achieve high seasonal and nomimal energy performances. Compared to air, in fact, the temperature of the water from an aquifer, well or watercourse is characterised by significantly lower values in summer and higher values in winter and, in general, by slight variations when functioning during the different seasons. Galletti's range of MCW and LEW chillers and heat pumps have been designed to exploit this opportunity more efficiently and various versions of the units are available to better adapt to different types of installations. Water chillers are also used combined with a dry cooler, where it is not possible to install an air unit for lack of space or for the presence of structures that are not able to support its weight.



An efficiency pack for every application

To respond to the different installation requirements in the air conditioning market means being able to propose ad hoc technical solutions where the main features are optimised each time, according to the specific project.
The philosophy underlying the Efficiency Pack adopted on Galletti's range of water-cooled chillers aims to provide systems that focus on reliability and redundancy through bi-circuit solutions or part-load efficiency through tandem or trio solutions. In the first case, the continuity of the supply of power to the system is in fact guaranteed by the presence of independent circuits and continues to operate when the machine comes to a partial stop. In the second case, however, the presence of several compressors connected in parallel to the same cooling circuit allows to achieve a high degree of efficiency under part-load conditions.



High power density

The footprint represents a key feature for units installed inside equipment compartments. The design philosophy which characterises Galletti's water-water units takes this aspect into account, favouring a compact size by choosing smaller components without overlooking efficiency and reliability.
The scroll compressors and the plate heat exchangers fully comply with these criteria, while the careful positioning of the water connections to the system, helps minimising the space required and installation costs.

Versatility in every application

The different water temperatures needed to allow condensation heat to dissipate require ad hoc sizings of the plate heat exchangers involved. Whether the units use water from a well or aquifer, or whether the units are to be connected to a dry-cooler or an evaporating tower, from the range of Galletti products it is possible to choose the version that better meets the system requirements.
Versions are also available for heating purposes only which, like the reversible heat pumps, are not affected by the defrosting cycle which is typical of air-water systems.



Indoor packaged unit

MCW 5 - 39 kW





Rotary compressor | Scroll compressor | R-407 C refrigerant | Cooling only | Cooling / Heating

Compact single circuit units

MCW chillers and heat pumps are designed for residential and light-duty commercial environments, and in some cases for industrial applications, process industries and geothermal energy. The entire range is built with a structure and base made of galvanised sheet panelling in epoxy-polyester paint finish, RAL7035, and there is the possibility of choosing an efficient sound absorbing material which, together with the adoption of scroll type compressors, ensure that the units are exceptionally silent and compact.
With an attractive design, a small footprint, the possibility to fit the units with a hydraulic kit complete with circulation pump, expansion tank and buffer tank, means that the machines can even be installed in environments not involved in residential applications.
The design philosophy has favoured the development of units having a reduced height with water connections placed on the upper part, which reduce installation time and costs and the need for technical space.
The MCW series offers a wide range of configurations in terms of accessories available and consists of a large number of sizes, including several single-phase models, each available as a low noise version, in order to fully respond to all system requirements. Only top quality products are used for the cooling, hydraulic and electric systems guaranteeing high technical level of the MCW chillers in terms of efficiency, reliability and reduced noise levels.

PLUS

- Ease of installation and compact dimensions
- Scroll compressor
- Built-in hydronic units
- Vast range of available accessories
- Access to the tax incentives provided for energy retrofitting

The possibility to dissipate into the aquifer or soil using probes, maintains the original performance of the MCW unit during the entire period of use.

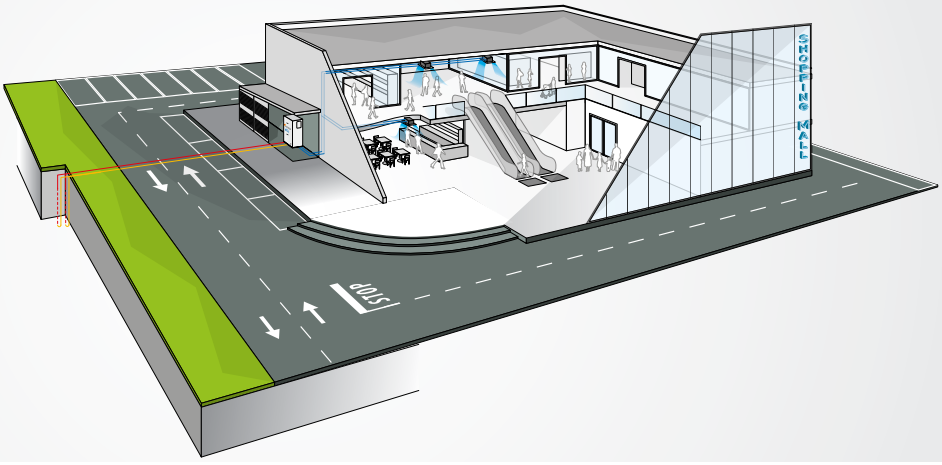



MAIN COMPONENTS

Structure

The structure is in galvanised steel sheet, which is resistant to corrosive agents. Closed equipment compartments are accessible on three sides thanks to easily removable panels with internal soundproofing insulation.

Compressor

Hermetic scroll compressor powered by a single or three-phase asynchronous motor. It is fixed to the base with rubber vibration dampers.

Heat exchangers

Brazed-welded plate condenser and evaporator in AISI 316 austenitic stainless steel, specifically developed to maximise heat exchange coefficients between water and refrigerant.



Microprocessor control

The microprocessor control has complete management of the MCW units and, because it is highly customisable, it allows to adapt and improve its functioning in every application.

Hydraulic kit

It consists of a centrifugal circulating pump powered by an asynchronous electric motor capable of providing a suitable available head under operating conditions. Also included are an expansion tank and an automatic filling tap.

CONFIGURATION

The models are completely configurable by selecting the version and the options. To the right is shown an example of configuration.

Version	Fields▶	1	2	3	4	5	6	7	8	9	10	11	12	13	14	15
MCW039HS		1	0	C	2	0	0	0	0	M	0	G	0	0	0	0

To verify the compatibility of the options, use the selection software or the price list.

AVAILABLE VERSIONS

Cooling only versions
MCW…CS Standard execution
MCW…CL Low noise execution

Versions with reversible heat pump
MCW…HS Standard execution
MCW…HL Low noise execution

CONFIGURATION OPTIONS

1 - REFRIGERANT - POWER SUPPLY
- **0** R407C - 230/1/50
- **1** R407C - 400/3/50 + N
- **2** R407C - 400/3/50 with 230V transformer for the auxiliary circuits

2 - CONTROL MICROPROCESSOR + THROTTLE VALVE
- **0** Base + traditional expansion valve
- **A** Base + electronic expansion valve

3 - CONDENSATION CONTROL
- **0** Absent
- **C** Modulating with adjustment of water flow rate installed on the unit

4 - PUMP AND TANK
- **0** Absent
- **1** Pump only
- **2** Pump + Tank

5 - REMOTE COMMUNICATION
- **0** Absent
- **2** RS485

6 - COOLING ACCESSORIES
- **0** Absent
- **M** Pressure gauges

7 – COMPRESSOR OPTION
- **0** Absent

8 – WATER CONDENSER
- **0** Uprated condenser for tower/dry cooler installation

9 – REMOTE CONTROL BOARD
- **0** Absent
- **S** Simplified remote control panel
- **M** Base microprocessor control

10 - PACKING - NET PRICE
- **0** Standard
- **1** Wooden crate
- **2** Wooden case

11 - VIBRATION DAMPERS
- **0** Absent
- **G** Base rubber vibration dumpers

12 - ACCESSORIES
- **0** No accessories

13 - DRY COOLER / REMOTE CONDENSER
- **0** Absent
- **A** Dry cooler
- **B** Dry cooler with condensation control (only if field "3" = "0")

14 - DRY COOLER / REMOTE CONDENSER
- **0** Absent
- **1** Standard version: horizontal air flow
- **2** Standard version: vertical air flow
- **3** Low-noise version: horizontal air flow
- **4** Low-noise version: vertical air flow

15 - EXECUTION
- **0** Standard
- **S** Special

MCW rated technical data

MCW - CS / CL		005	005 M	007	007 M	010	010 M	012
Power supply	V - ph - Hz	400 - 3N - 50						
Cooling capacity (1) (E)	kW	5,30	5,40	6,70	6,70	9,50	9,50	11,7
Total power input (1) (E)	kW	1,50	1,50	2,00	2,00	2,60	2,70	3,20
EER (1) (E)		3,53	3,60	3,35	3,35	3,60	3,52	3,66
ESEER (E)		3,42	3,41	3,26	3,31	3,46	3,53	3,57
Eurovent Efficiency class (E)		E	E	F	F	E	E	E
Water flow rate user side (1)	l/h	921	940	1163	1172	1651	1646	2025
Pressure drop, user side (1) (E)	kPa	26	27	29	29	26	25	29
Water flow rate source side (1)	l/h	1156	1178	1476	1491	2070	2072	2534
Pressure drop, source side (1) (E)	kPa	29	29	43	43	36	36	50
Water pump available pressure head (optional) (1)	kPa	78	77	69	68	60	60	124
Maximum absorbed current	A	4	12	5	15	7	23	10
Sturtup current (without accessories)	A	24	47	32	61	46	100	50
n° of scroll compressor/ circuits	Nr.	1 / 1	1 / 1	1 / 1	1 / 1	1 / 1	1 / 1	1 / 1
Buffer tank (optional)	dm^3	47	47	47	47	47	47	92
Weight without accessories	kg	103	103	106	106	108	108	118
Weight with pump and tank	kg	138	138	141	141	143	143	168
MCW CS: Sound power level (2)	dB(A)	55	55	55	55	59	59	61
MCW CL: Sound power level (2)	dB(A)	53	53	53	53	57	57	59

MCW - CS / CL		015	018	020	022	027	031	039
Power supply	V - ph - Hz	400 - 3N - 50						
Cooling capacity (1) (E)	kW	14,4	17,1	19,4	21,0	26,0	29,8	37,0
Total power input (1) (E)	kW	3,80	4,60	5,00	5,60	7,10	8,30	10,2
EER (1) (E)		3,79	3,72	3,88	3,75	3,66	3,59	3,63
ESEER (E)		3,64	3,70	3,79	3,69	3,58	3,59	3,61
Eurovent Efficiency class (E)		E	E	D	E	E	E	E
Water flow rate user side (1)	l/h	2490	2946	3351	3627	4475	5160	6377
Pressure drop, user side (1) (E)	kPa	26	28	25	27	24	27	26
Water flow rate source side (1)	l/h	3107	3672	4156	4527	5622	6490	8030
Pressure drop, source side (1) (E)	kPa	29	43	36	43	36	50	50
Water pump available pressure head (optional) (1)	kPa	113	92	135	125	106	82	129
Maximum absorbed current	A	13	14	16	17	20	29	32
Sturtup current (without accessories)	A	66	74	101	98	130	130	135
n° of scroll compressor/ circuits	Nr.	1 / 1	1 / 1	1 / 1	1 / 1	1 / 1	1 / 1	1 / 1
Buffer tank (optional)	dm^3	92	92	92	92	92	92	92
Weight without accessories	kg	121	125	167	203	210	219	233
Weight with pump and tank	kg	171	175	217	253	260	269	283
MCW CS: Sound power level (2)	dB(A)	61	61	61	62	62	65	65
MCW CL: Sound power level (2)	dB(A)	59	59	60	60	60	63	63

Conditions in cooling mode only (CS/CL):
(1) Water temperature - user side 12/7°C, water temperature - dissipation side 30/35 °C (14511:2011)
(2) Sound power level measured according to UNI EN ISO 9614
(E) EUROVENT certified data

Conditions in heat pump mode only (HS/HL):
(1) Water temperature - user side 12/7°C, water temperature - dissipation side 30/35 °C (14511:2011)
(2) Water temperature - user side 40/45°C, water temperature - dissipation side 10/7 °C (14511:2011)
(3) Sound power level measured according to UNI EN ISO 9614
(E) EUROVENT certified data



MCW H rated technical data

MCW - HS / HL		005 M	005	007 M	007	010 M	010	012
Power supply	V - ph - Hz	230 - 1 - 50	400 - 3N - 50	230 - 1 - 50	230 - 1 - 50	230 - 1 - 50	400 - 3N - 50	400 - 3N - 50
Cooling capacity (1) (E)	kW	5,14	4,97	6,26	6,28	8,95	8,99	10,9
Total power input (1) (E)	kW	1,59	1,58	2,16	2,14	2,83	2,79	3,42
EER (1) (E)		3,23	3,15	2,89	2,82	3,17	3,22	3,18
ESEER (E)		3,24	3,26	3,11	3,03	3,36	3,28	3,36
Eurovent Efficiency class (E)		F	F	G	G	F	F	F
Water flow rate user side (1)	l/h	890	862	1084	1088	1548	1555	1885
Pressure drop, user side (1) (E)	kPa	24	23	25	25	22	22	25
Water flow rate source side (1)	l/h	1142	1112	1425	1424	2001	2001	2428
Pressure drop, source side (1) (E)	kPa	30	28	42	42	28	28	42
Water pump available pressure head (optional) (1)	kPa	91	92	84	85	78	79	148
Heating capacity (2) (E)	kW	5,50	5,35	7,08	6,91	9,86	9,62	11,9
Total power input (2) (E)	kW	1,78	1,75	2,36	2,29	3,13	3,06	3,70
COP (2) (E)		2,94	3,06	3,00	2,96	3,14	3,15	3,23
Eurovent Efficiency class (E)		F	G	F	F	F	F	F
Water flow rate user side (2)	l/h	949	922	1219	1189	1701	1661	2059
Pressure drop, user side (2) (E)	kPa	21	20	32	30	21	20	31
Water flow rate source side (2)	l/h	1108	1072	1409	1377	1995	1948	2448
Pressure drop, source side (2) (E)	kPa	36	33	41	39	35	34	41
Water pump available pressure head (optional) (1)	kPa	81	82	75	75	67	67	130
Maximum absorbed current	A	12	4	15	5	23	7	10
Sturtup current (without accessories)	A	47	24	61	32	100	46	50
n° of scroll compressor/ circuits	Nr.	1 / 1	1 / 1	1 / 1	1 / 1	1 / 1	1 / 1	1 / 1
Buffer tank (optional)	dm^3	47	47	47	47	47	47	92
Weight without accessories	kg	106	106	109	109	112	112	123
Weight with pump and tank	kg	141	141	144	144	147	147	173
MCW HS: Sound power level (3)	dB(A)	55	55	55	55	59	59	61
MCW HL: Sound power level (3)	dB(A)	53	53	53	53	57	57	59

MCW - HS / HL		015	018	020	022	027	031	039
Power supply	V - ph - Hz	400 – 3N - 50						
Cooling capacity (1) (E)	kW	13,5	15,9	18,7	19,6	24,2	27,9	34,5
Total power input (1) (E)	kW	4,06	4,78	5,31	5,96	7,53	8,82	10,9
EER (1) (E)		3,33	3,33	3,52	3,29	3,22	3,16	3,16
ESEER (E)		3,44	3,5	3,67	3,44	3,36	3,35	3,36
Eurovent Efficiency class (E)		F	F	E	F	F	F	F
Water flow rate user side (1)	l/h	2333	2752	3236	3384	4186	4813	5952
Pressure drop, user side (1) (E)	kPa	23	24	23	24	21	23	23
Water flow rate source side (1)	l/h	2987	3518	4092	4341	5407	6236	7718
Pressure drop, source side (1) (E)	kPa	28	41	35	41	35	48	48
Water pump available pressure head (optional) (1)	kPa	148	140	122	158	151	139	149
Heating capacity (2) (E)	kW	14,4	17,5	19,5	21,4	26,3	30,6	37,9
Total power input (2) (E)	kW	4,43	5,16	5,71	6,46	8,19	9,49	11,6
COP (2) (E)		3,25	3,39	3,42	3,31	3,21	3,22	3,27
Eurovent Efficiency class (E)		E	E	E	E	F	F	E
Water flow rate user side (2)	l/h	2487	3019	3376	3695	4546	5280	6550
Pressure drop, user side (2) (E)	kPa	20	31	25	31	25	36	36
Water flow rate source side (2)	l/h	2950	3648	4083	4417	5353	6234	7773
Pressure drop, source side (2) (E)	kPa	35	40	35	38	33	37	36
Water pump available pressure head (optional) (1)	kPa	124	132	115	127	113	89	132
Maximum absorbed current	A	66	14	16	17	20	29	32
Sturtup current (without accessories)	A	31	74	101	98	130	130	135
n° of scroll compressor/ circuits	Nr.	1 / 1	1 / 1	1 / 1	1 / 1	1 / 1	1 / 1	1 / 1
Buffer tank (optional)	dm^3	92	92	92	92	92	92	92
Weight without accessories	kg	125	132	175	209	221	236	247
Weight with pump and tank	kg	175	182	225	259	271	286	297
MCW HS: Sound power level (3)	dB(A)	61	61	61	62	62	65	65
MCW HL: Sound power level (3)	dB(A)	59	59	60	60	60	63	63

Dimensional drawings

MCW 005 - 010

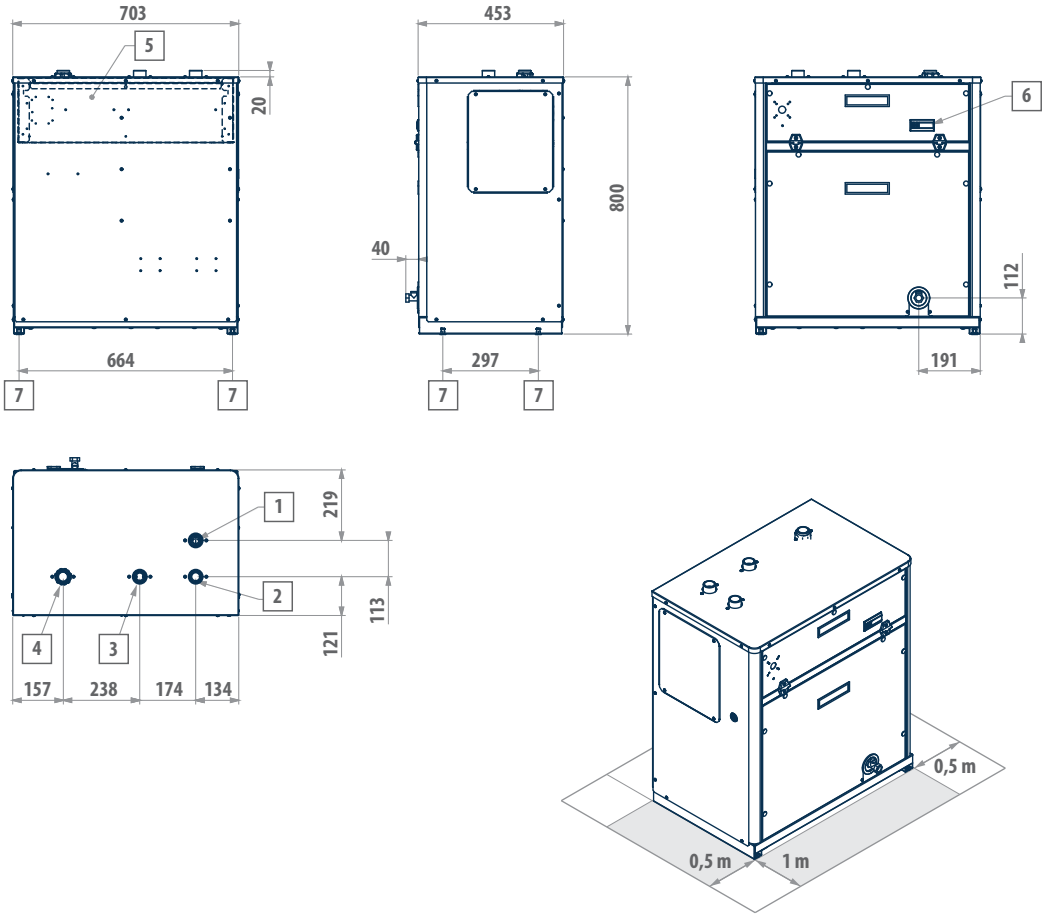

LEGEND	
1	Condenser water inlet (1 ¼" gas)
2	Condenser water outlet (1 ¼" gas)
3	Evaporator water inlet (1 ¼" gas)
4	Evaporator water outlet (1 ¼" gas)
5	Electric control board
6	Microprocessor control
7	Vibration dampers



Dimensional drawings

MCW 012 - 039

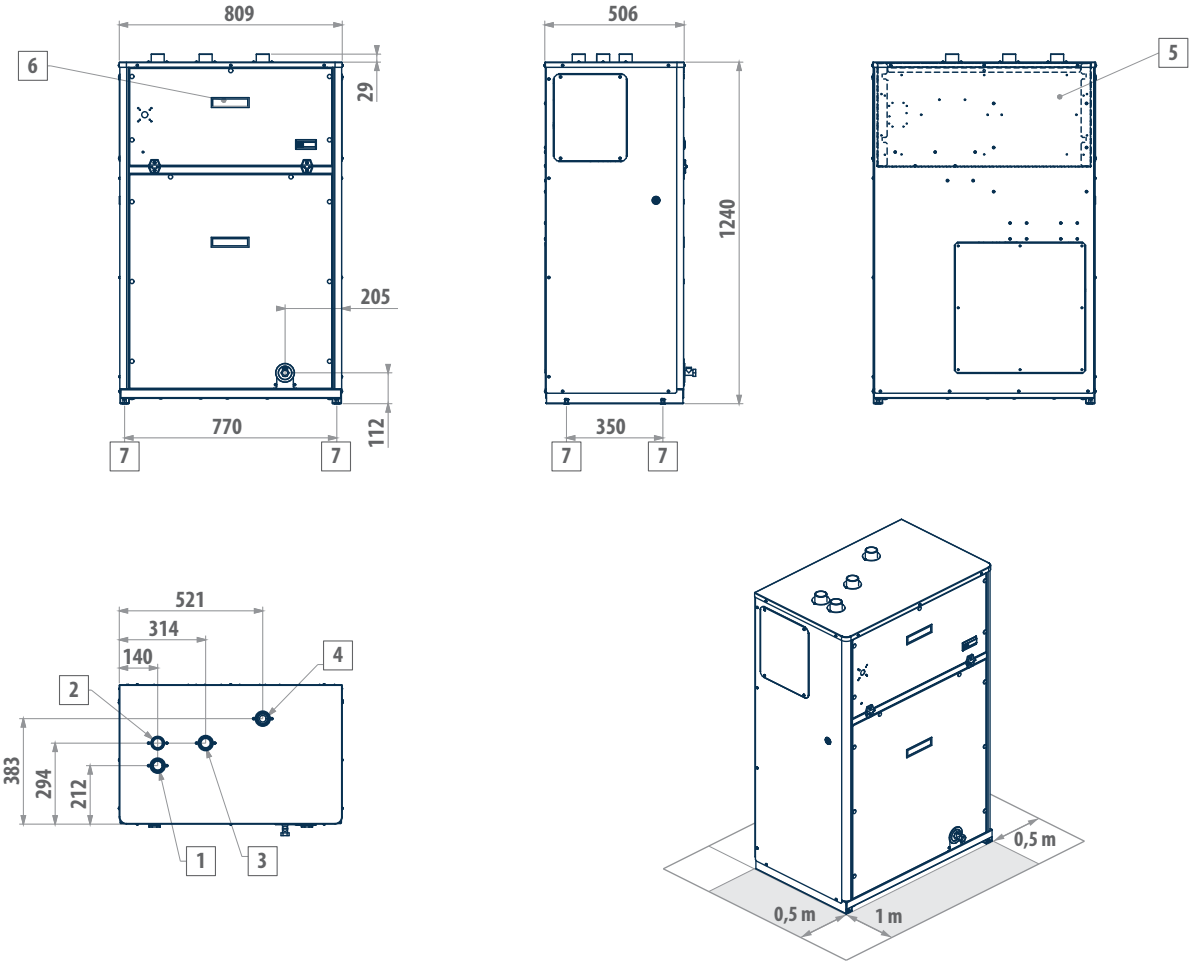

LEGEND	
1	Condenser water inlet (1 ¼" gas)
2	Condenser water outlet (1 ¼" gas)
3	Evaporator water inlet (1 ¼" gas)
4	Evaporator water outlet (1 ¼" gas)
5	Electric control board
6	Microprocessor control
7	Vibration dampers

Indoor packaged unit

LEW 40 - 680 kW





Scroll compressor | R-410A refrigerant | Cooling only | Heating only | Cooling / Heating

PLUS

- Electronic expansion valve
- Up to 6 compressors
- 1 or 2 cooling circuits
- Remote connectivity to the most common protocols
- Compact dimensions
- Low noise levels thanks to complete enclosure panelling

Compact and efficient water-water units

LEW water chillers and reversible heat pumps are air conditioning or process fluid conditioning units conceived for both residential and industrial use and designed to operate 24 hours a day. They cover a wide range of heating capacities, from 40 to 680 kW, guaranteeing a high thermodynamic efficiency and broad configurability, both in terms of accessories and cooling circuits.
The LEW units are developed in a completely enclosed version for a low noise operation making it possible to install them in non-segregated environments. The use of R410A as refrigerating fluid and top quality components for the cooling, hydraulic and electric systems guarantees high technical level of the LEW units of the chillers in terms of efficiency, reliability and reduced noise levels.
The LEW series is characterised by reduced footprint, high COP during the thermodynamic cycle, no external noise, reduced refrigerant charge.
The range of LEW units can be combined with geothermal probes used to dissipate in soil.
The LEW series is available as a cooling unit only, combined with a cooling tower or with water from a well or mains, a heat pump only for heating and reversible heat pumps on cooling circuit side.
The versions are in turn developed in two different acoustic systems: Standard and Low Noise.
Hydraulic modules complete with pumps on user side and dissipation side are available in a low noise version to be installed alongside the basic unit.
All units, irrespective of type of construction, are equipped with electronic expansion valves to maximise efficiency under part load conditions.

The possibility of keeping the evaporator indoors means there is no need to add glycol to the water inside the system. In addition, you can keep all components requiring maintenance in an easily accessible room.

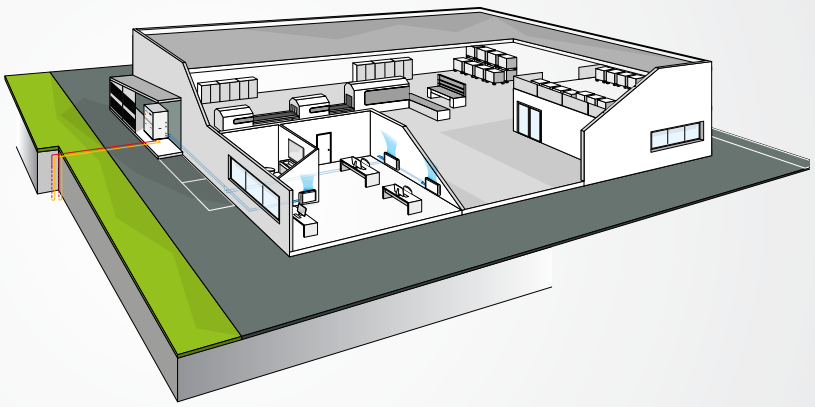



MAIN COMPONENTS

Structure

Made in galvanised steel sheet with a polyester powder coating for outdoors.
The compressor compartment is completely sealed and may be accessed on 3 sides thanks to easy-to-remove panels that greatly simplify maintenance and/or inspection.



Scroll compressors

The scroll compressors are today the best solution in terms of reliability and sound power level. The compressors are supplied complete with motor protection against overheating, overcurrents and excessive outlet gas temperatures.

Heat exchangers

All units have heat exchangers with braze-welded AISI 316 austenitic stainless steel plates and connections made of AISI 316 L, characterised by a reduced carbon content to facilitate brazing.

Cooling circuit

Can be produced in three different versions using the same power size (Efficiency Pack), it mainly uses R410A scroll compressors, brazed plate heat exchangers, finned coil condenser, electronic expansion valves.



Electronic microprocessor controller

Allows the complete management of the unit. The electronic control system allows the setpoint to be adjusted automatically according to the outdoor temperature in order to reduce consumption and broaden the working temperature range. With the advanced microprocessor control it is possible to set up LAN networks for controlling 4 units in parallel.

CONFIGURATION

The models are completely configurable by selecting the version and the options. To the right is shown an example of configuration.

Version	Fields ▶	1	2	3	4	5	6	7	8	9	10
LEW132HL		2	B	0	P	0	1	G	0	0	2

To verify the compatibility of the options, use the selection software or the price list.

AVAILABLE VERSIONS

Cooling only versions

- **LEW...CS** Operating with mains or well water, standard version
- **LEW...CL** Operating with mains or well water, low-noise version
- **LEW...DS** Operating with dry-cooler or tower water, standard version
- **LEW...DL** Operating with dry-cooler or tower water, low-noise version

Versions with heat pump

- **LEW...HS** Reversible, standard execution
- **LEW...HL** Reversible, low noise execution
- **LEW...WS** Heating only, standard execution
- **LEW...WL** Heating only, low-noise execution

CONFIGURATION OPTIONS

1 - REFRIGERANT - POWER SUPPLY
- **0** 400/3/50 + N + fuse protectors
- **2** 400/3/50 + N + Circuit breakers

2 – CONTROL MICROPROCESSOR + THROTTLE VALVE
- **0** Base + electronic expansion valve
- **A** Base + traditional expansion valve
- **B** Advanced + electronic expansion valve
- **C** Advanced + traditional expansion valve

3 – PARTIAL HEAT RECOVERY (the addition of "modulation - air side" option is mandatory)
- **0** Absent
- **D** Partial recovery only available with advanced control microprocessor (if field 2 = "B" or "C")

4 – AIR FLOW MODULATION SOURCE SIDE
- **0** Absent
- **P** Condensation control with modulated signal 0-10V (signal), available only if field 2 = "B" or "C"

5 – AIR FLOW MODULATION USER SIDE
- **0** Absent
- **D** Air flow modulation with output signal in ΔT logic = cost
- **T** Air flow modulation with output signal in T logic = cost

6 - REMOTE COMMUNICATION
- **0** Absent
- **1** RS485 Serial board (Modbus or Carel protocol)
- **2** Lonwork serial board (if field 2 = "B" or "C")
- **3** GSM modem kit (if field 2 = "B" or "C")
- **4** pCOWEB Ethernet card (SNMP or BACNET protocol) - (if field 2 = "B" or "C")
- **5** pCOWEB Ethernet card (SNMP or BACNET protocol) + supervision software - (if field 2 = "B" or "C")

7 – BASE VIBRATION DAMPERS
- **0** Absent
- **G** Base rubber vibration dumpers
- **M** Base spring vibration dumpers

8 - PACKING
- **0** Standard
- **1** Wooden crate
- **2** Wooden case

9 - REMOTE CONTROLLER
- **0** Absent
- **1** Simplified remote control panel
- **2** Remote display for BASE microprocessor - (if field 2= "0" or "A")
- **3** Remote display for ADVANCED microprocessor - (available only if field 2 = "B" or "C")

10 – INSULATED EXTERNAL HYDRAULIC MODULE SEPARATED FROM THE MAIN UNIT
- **0** Absent
- **1** Module with pumps (LP unit + LP dissipation)
- **2** Module with pumps (LP unit + LP inverter dissipation), ONLY IF FIELD 4 = P
- **3** Module with pumps (LP unit + HP dissipation)
- **4** Module with pumps (LP unit + HP inverter dissipation), ONLY IF FIELD 4 = P
- **5** Module with pumps (HP unit + LP dissipation)
- **6** Module with pumps (HP unit + LP inverter dissipation), ONLY IF FIELD 4 = P
- **7** Module with pumps (HP unit + HP dissipation)
- **8** Module with pumps (HP unit + HP inverter dissipation), ONLY IF FIELD 4 = P
- **0** Standard
- **S** Special

ACCESSORIES

- **A** Power factor correction capacitors
- **B** Soft-starter kit
- **C** Service kit: kit of sensors for quick diagnosis (only if field 2 = "B" or "C")
- **D** Clock card (if field 2 = "B" or "C")
- **E** ON/OFF status of the compressors
- **F** Restricted power remote contact (gradual) (only if field 2 = "B" or "C")
- **G** Configurable digital alarm card (only if field 2 = "B" or "C")
- **H** Pressure gauges
- **I** Four Victaulic couplings for quick water IN-OUT connection
- **L** Regulating filter kit (solenoid and tap on the liquid line)
- **M** Outdoor temperature probe for setpoint compensation (only if field 2 = "B" or "C")
- **N** Water temp. probe on dissipation side for Version = "H" or "W" (only if field 10= 0)
- **P** Unit lifting kit

Rated technical data of LEW D water chillers

LEW D		041	042	051	052	061	062	071	072
Cooling capacity (1) (E)	kW	48,4	47,6	56,4	56,3	65,1	64,9	73,5	73,4
Total power input (1) (E)	kW	11,2	10,5	14	14	15	15	17	17
EER (1) (E)	-	4,32	4,52	4,17	4,16	4,44	4,43	4,31	4,31
ESEER (E)	-	5,61	6,04	5,39	5,78	5,73	6,11	5,59	6,01
Eurovent Efficiency class (E)		C	C	D	D	C	C	C	C
Water flow rate user side (1)	l/h	8364	8219	9743	9724	11236	11212	12695	12685
Pressure drop, user side (1) (E)	kPa	34	33	45	45	37	37	45	45
Water flow rate source side (1)	l/h	10171	9919	11907	11888	13610	13582	15433	15422
Pressure drop, source side (1) (E)	kPa	45	43	60	60	47	47	60	60
Power supply	V - ph - Hz	400 - 3N - 50							
Maximum absorbed current	A	32	30	37	37	40	40	46	46,1
Sturtup current (without accessories)	A	113	111	156	156	158	158	181	180,7
Startup current with softstarter	A	81	73	84	84	97	97	106	106,2
n° of scroll compressor/ circuits	Nr.	2 / 2	2 / 1	2 / 2	2 / 1	2 / 2	2 / 1	2 / 2	2 / 1
LEW-DS: Sound power level (2) (E)	dB(A)	72	72	72	72	73	73	73	73
LEW-DL: Sound power level (2) (E)	dB(A)	68	68	68	68	69	69	69	69

LEW D		081	082	091	092	111	112	131	132
Cooling capacity (1) (E)	kW	84,7	84,6	93,9	94,0	114	114	130	130
Total power input (1) (E)	kW	18,4	18,4	21,1	21,1	24,3	24,3	28,3	28,3
EER (1) (E)	-	4,60	4,60	4,45	4,45	4,69	4,68	4,58	4,58
ESEER (E)	-	5,89	6,25	5,81	6,25	6,05	6,48	6,00	6,43
Eurovent Efficiency class (E)		C	C	C	C	B	B	C	C
Water flow rate user side (1)	l/h	14621	14604	16214	16228	19647	19634	22354	22375
Pressure drop, user side (1) (E)	kPa	35	35	43	43	37	37	46	46
Water flow rate source side (1)	l/h	17616	17601	19630	19645	23617	23607	26943	26965
Pressure drop, source side (1) (E)	kPa	46	46	57	57	47	47	60	61
Power supply	V - ph - Hz	400 - 3N - 50							
Maximum absorbed current	A	50	50	32	30	37	37	40	40
Sturtup current (without accessories)	A	178	178	113	111	156	156	158	158
Startup current with softstarter	A	119	119	81	73	84	84	97	97
n° of scroll compressor/ circuits	Nr.	2 / 2	2 / 1	2 / 2	2 / 1	2 / 2	2 / 1	2 / 2	2 / 1
LEW-DS: Sound power level (2) (E)	dB(A)	74	74	76	76	76	76	77	77
LEW-DL: Sound power level (2) (E)	dB(A)	70	70	72	72	72	72	73	73

LEW D		141	142	144	161	162	164	181	182	184
Cooling capacity (1) (E)	kW	149	149	149	168	167	169	196	196	191
Total power input (1) (E)	kW	32,5	32,5	33,4	36,6	36,6	36,5	42,9	42,9	41,2
EER (1) (E)	-	4,58	4,59	4,46	4,58	4,57	4,62	4,57	4,57	4,62
ESEER (E)	-	5,90	6,17	6,09	5,80	6,17	6,24	5,84	6,29	6,33
Eurovent Efficiency class (E)		C	C	C	C	C	C	C	C	C
Water flow rate user side (1)	l/h	25693	25727	25692	28910	28861	29104	33824	33845	32864
Pressure drop, user side (1) (E)	kPa	43	43	43	47	47	47	50	50	47
Water flow rate source side (1)	l/h	30993	31025	31136	34897	34845	35072	40842	40870	39630
Pressure drop, source side (1) (E)	kPa	56	56	57	49	49	50	55	55	51
Power supply	V - ph - Hz	400 - 3N - 50								
Maximum absorbed current	A	91	91	92	102	102	100	116	116	122
Sturtup current (without accessories)	A	291	291	219	302	302	217	368	368	238
Startup current with softstarter	A	226	226	144	237	237	158	285	285	186
n° of scroll compressor/ circuits	Nr.	2 / 2	2 / 1	4 / 2	2 / 1	2 / 2	4 / 2	2 / 2	2 / 1	4 / 2
LEW-DS: Sound power level (2) (E)	dB(A)	77	77	80	77	77	80	78	78	81
LEW-DL: Sound power level (2) (E)	dB(A)	73	73	76	73	73	76	74	74	77



Rated technical data of LEW D water chillers

LEW D		204	214	243	244	283	284	314	344
Cooling capacity (1) (E)	kW	209	226	257	266	294	297	328	352,8
Total power input (1) (E)	kW	44,6	48,4	53,7	54,4	63,8	63,7	73,4	79,4
EER (1) (E)	-	4,70	4,67	4,78	4,88	4,62	4,67	4,47	4,44
ESEER (E)	-	6,46	6,44	6,37	6,62	6,34	6,21	6,15	6,13
Eurovent Efficiency class (E)		B	B	B	B	C	B	C	C
Water flow rate user side (1)	l/h	36109	39008	44169	45744	50710	51237	56518	60824
Pressure drop, user side (1) (E)	kPa	47	54	28	29	35	37	44	50
Water flow rate source side (1)	l/h	43430	46932	53105	54802	61268	61798	68600	73894
Pressure drop, source side (1) (E)	kPa	51	60	36	38	46	47	58	54
Power supply	V - ph - Hz	400 - 3N - 50							
Maximum absorbed current	A	131	140	153	159	174	182	205	218
Sturtup current (without accessories)	A	288	295	336	316	401	366	384	449
Startup current with softstarter	A	224	233	271	254	318	301	319	366
n° of scroll compressor/ circuits	Nr.	4 / 2	4 / 2	3 / 1	4 / 2	3 / 1	4 / 2	4 / 2	4 / 2
LEW-DS: Sound power level (2) (E)	dB(A)	81	81	81	82	81	82	82	83
LEW-DL: Sound power level (2) (E)	dB(A)	77	77	77	78	77	78	78	79

LEW D		374	424	484	485	535	576	636
Cooling capacity (1) (E)	kW	383	434	497	434	489	526	583
Total power input (1) (E)	kW	85,4	95,3	106	127	148	154	179
EER (1) (E)	-	4,48	4,56	4,70	3,41	3,30	3,42	3,25
ESEER (E)	-	6,20	6,45	6,56	6,61	6,55	6,66	6,54
Eurovent Efficiency class (E)		C	C	B	F	F	F	F
Water flow rate user side (1)	l/h	66023	74859	85636	74819	84254	90554	100434
Pressure drop, user side (1) (E)	kPa	47	51	49	40	41	41	49
Water flow rate source side (1)	l/h	80108	90561	103068	96170	109014	116276	130247
Pressure drop, source side (1) (E)	kPa	54	54	59	49	62	60	74
Power supply	V - ph - Hz	400 - 3N - 50						
Maximum absorbed current	A	232	281	302	290	256	348	424
Sturtup current (without accessories)	A	457	490	525	552	551	610	621
Startup current with softstarter	A	374	420	454	406	495	464	565
n° of scroll compressor/ circuits	Nr.	4 / 2	4 / 2	4 / 2	5 / 2	5 / 2	6 / 2	6 / 2
LEW-DS: Sound power level (2) (E)	dB(A)	83	83	86	84	84	85	85
LEW-DL: Sound power level (2) (E)	dB(A)	79	79	82	80	80	81	81

(1) Water temperature - user side 12/7°C, water temperature - dissipation side 30/35 °C (14511:2011)
(2) Sound power level measured according to UNI EN ISO 9614
(E) EUROVENT certified data

Rated technical data of LEW C water chillers

LEW C		041	042	051	052	061	062	071	072
Cooling capacity (1)	kW	51,6	50,8	59,8	59,7	68,7	68,8	77,5	77,4
Total power input (1)	kW	9,62	9,00	11,7	11,7	12,8	12,8	14,9	14,9
EER (1)	-	5,37	5,64	5,13	5,12	5,35	5,36	5,21	5,20
Water flow rate user side (1)	l/h	8923	8777	10342	10328	11871	11880	13388	13379
Pressure drop, user side (1)	kPa	38	37	51	51	40	40	50	50
Water flow rate source side (1)	l/h	3496	3414	4076	4072	4653	4656	5266	5264
Pressure drop, source side (1)	kPa	7	7	9	9	12	12	15	15
Power supply	V - ph - Hz	400 - 3N - 50Hz							
FLA Maximum absorbed current	A	32	30	37	37	40	40	46	46
LRA Inrush current (without accessories)	A	113	111	156	156	158	158	181	181
LRA Inrush current (with softstarter)	A	81	73	84	84	97	97	106	106
n° of scroll compressor/ circuits	Nr.	2 / 2	2 / 1	2 / 2	2 / 1	2 / 2	2 / 1	2 / 2	2 / 1
LEW-CS: Sound power level (2)	dB(A)	72	72	72	72	73	73	73	73
LEWCL: Sound power level (2)	dB(A)	68	68	68	68	69	69	69	69
Weight module with optional hydraulic pumps	kg	391	391	400	400	400	400	395	395
Operating weight	kg	370	360	430	420	440	430	450	440

LEW C		081	082	091	092	111	112	131	132
Cooling capacity (1)	kW	88,7	88,6	98,6	98,7	118,3	118,4	134,9	134,8
Total power input (1)	kW	16,4	16,4	18,8	18,8	22,1	22,1	25,7	25,7
EER (1)	-	5,40	5,39	5,25	5,26	5,34	5,35	5,25	5,26
Water flow rate user side (1)	l/h	15314	15300	17033	17049	20405	20420	23283	23275
Pressure drop, user side (1)	kPa	39	39	48	48	39	39	50	50
Water flow rate source side (1)	l/h	5997	5993	6694	6699	8004	8008	9149	9145
Pressure drop, source side (1)	kPa	18	18	22	22	30	30	38	38
Power supply	V - ph - Hz	400 - 3N - 50Hz							
FLA Maximum absorbed current	A	50	50	61	61	70	70	79	79
LRA Inrush current (without accessories)	A	178	178	186	186	240	240	248	248
LRA Inrush current (with softstarter)	A	119	119	134	134	178	178	186	186
n° of scroll compressor/ circuits	Nr.	2 / 2	2 / 1	2 / 2	2 / 1	2 / 2	2 / 1	2 / 2	2 / 1
LEW-CS: Sound power level (2)	dB(A)	74	74	76	76	76	76	77	77
LEWCL: Sound power level (2)	dB(A)	70	70	72	72	72	72	73	73

LEW C		141	142	144	161	162	164	181	182	184
Cooling capacity (1)	kW	157	157	156	174	174	175	204	204	198
Total power input (1)	kW	28,8	28,8	29,7	33,1	33,2	33,0	39,2	39,1	37,6
EER (1)	-	5,25	5,26	5,34	5,25	5,25	5,32	5,20	5,21	5,27
Water flow rate user side (1)	l/h	27009	27014	26953	30048	30067	30274	35104	35161	34189
Pressure drop, user side (1)	kPa	47	47	47	51	51	52	54	54	51
Water flow rate source side (1)	l/h	10573	10574	10604	11818	11826	11885	13833	13851	13442
Pressure drop, source side (1)	kPa	19	19	19	23	23	23	30	31	29
Power supply	V - ph - Hz	400 - 3N - 50Hz								
FLA Maximum absorbed current	A	91	91	92	102	102	100	116	116	122
LRA Inrush current (without accessories)	A	291	291	219	302	302	217	368	368	238
LRA Inrush current (with softstarter)	A	226	226	144	237	237	158	285	285	186
n° of scroll compressor/ circuits	Nr.	2 / 2	2 / 1	4 / 2	2 / 1	2 / 2	4 / 1	2 / 2	2 / 1	4 / 2
LEW-CS: Sound power level (2)	dB(A)	77	77	80	77	77	80	78	78	81
LEWCL: Sound power level (2)	dB(A)	73	73	76	73	73	76	74	74	77

(1) Water temperature - user side 12/7°C, water temperature - dissipation side 15/30 °C (14511:2011)
(2) Sound power level measured according to UNI EN ISO 9614



Rated technical data of LEW C water chillers

LEW C		204	214	243	244	283	284	314	344
Cooling capacity (1)	kW	218	234	267	277	307	310	341	367
Total power input (1)	kW	40,6	44,1	49,2	49,5	57,8	57,7	66,6	72,3
EER (1)	-	5,38	5,32	5,43	5,60	5,31	5,38	5,13	5,08
Water flow rate user side (1)	l/h	37653	40422	46007	47854	52868	53428	58841	63334
Pressure drop, user side (1)	kPa	51	57	51	55	40	41	49	56
Water flow rate source side (1)	l/h	14763	15871	18025	18657	20795	20975	23255	25061
Pressure drop, source side (1)	kPa	28	33	21	23	28	28	35	36
Power supply	V - ph - Hz	400 - 3N - 50Hz							
FLA Maximum absorbed current	A	131	140	153	159	174	182	205	218
LRA Inrush current (without accessories)	A	288	295	336	316	401	366	384	449
LRA Inrush current (with softstarter)	A	224	233	271	254	318	301	319	366
n° of scroll compressor/ circuits	Nr.	4 / 2	4 / 2	3 / 1	4 / 2	3 / 1	4 / 2	4 / 2	4 / 2
LEW-CS: Sound power level (2)	dB(A)	81	81	81	82	81	82	82	83
LEWCL: Sound power level (2)	dB(A)	77	77	77	78	77	78	78	79

LEW C		374	424	484	485	535	576	636
Cooling capacity (1)	kW	401	454	519	505	572	610	678
Total power input (1)	kW	77,5	85,3	95,3	96,4	107	117	131
EER (1) (E)	-	5,17	5,32	5,44	5,24	5,33	5,21	5,18
Water flow rate user side (1)	l/h	69045	78322	89412	87003	98690	105153	116963
Pressure drop, user side (1)	kPa	54	56	53	53	55	53	65
Water flow rate source side (1)	l/h	27251	30767	35016	34283	38775	41465	46126
Pressure drop, source side (1)	kPa	33	33	39	23	28	32	39
Power supply	V - ph - Hz	400 - 3N - 50Hz						
FLA Maximum absorbed current	A	232	281	302	290	256	348	424
LRA Inrush current (without accessories)	A	457	490	525	552	551	610	621
LRA Inrush current (with softstarter)	A	374	420	454	406	495	464	565
n° of scroll compressor/ circuits	Nr.	4 / 2	4 / 2	4 / 2	5 / 2	5 / 2	6 / 2	6 / 2
LEW-CS: Sound power level (2)	dB(A)	83	83	86	84	84	85	85
LEWCL: Sound power level (2)	dB(A)	77	78	78	79	79	79	82

(1) Water temperature - user side 12/7°C, water temperature - dissipation side 15/30 °C (14511:2011)
(2) Sound power level measured according to UNI EN ISO 9614

Rated technical data of LEW W non reversible heat pumps

LEW W		041	042	051	052	061	062	071	072
Heating capacity (1)	kW	55,5	54,3	65,3	65,4	74,0	74,1	84,5	84,6
Total power input (1)	kW	13,6	13,0	16,4	16,3	17,9	18,0	20,8	20,8
COP (1) (E)	-	4,07	4,18	3,99	4,01	4,12	4,13	4,07	4,08
Water flow rate user side (1)	l/h	9578	9376	11270	11282	12791	12803	14596	14611
Pressure drop, user side (1)	kPa	42	40	56	56	42	42	55	55
Water flow rate source side (1)	l/h	12314	12146	14444	14467	16521	16540	18775	18806
Pressure drop, source side (1)	kPa	67	66	90	90	90	90	88	88
Power supply	V - ph - Hz	400 - 3N - 50							
FLA Maximum absorbed current	A	30	30	37	37	40	40	46	46
LRA Inrush current (without accessories)	A	111	111	156	156	157	157	164	164
LRA Inrush current (with softstarter)	A	73	73	83	83	102	102	107	107
n° of scroll compressor/ circuits	Nr.	2 / 2	2 / 1	2 / 2	2 / 1	2 / 2	2 / 1	2 / 2	2 / 1
LEW-WS: Sound power level (2)	dB(A)	72	72	72	72	73	73	73	73
LEW-WL: Sound power level (2)	dB(A)	68	68	68	68	69	69	69	69
Operating Weight	kg	415	385	475	445	502	467	512	482

LEW W		081	082	091	092	111	112	131	132
Heating capacity (1)	kW	96,1	96,1	108	108	129	129	148	148
Total power input (1)	kW	22,6	22,6	25,9	25,9	30,1	30,1	35,2	35,2
COP (1) (E)	-	4,25	4,25	4,15	4,14	4,28	4,28	4,20	4,19
Water flow rate user side (1)	l/h	16607	16614	18576	18580	22295	22307	25511	25508
Pressure drop, user side (1)	kPa	42	42	52	52	43	43	55	55
Water flow rate source side (1)	l/h	21552	21561	23972	23970	28958	28986	33026	33009
Pressure drop, source side (1)	kPa	68	68	85	85	74	74	90	90
Power supply	V - ph - Hz	400 - 3N - 50							
FLA Maximum absorbed current	A	50	50	61	61	70	71	79	79
LRA Inrush current (without accessories)	A	176	176	203	203	238	275	244	244
LRA Inrush current (with softstarter)	A	117	117	137	137	176	210	182	182
n° of scroll compressor/ circuits	Nr.	2 / 2	2 / 1	2 / 2	2 / 1	2 / 2	2 / 1	2 / 2	2 / 1
LEW-WS: Sound power level (2)	dB(A)	74	74	76	76	76	76	77	77
LEW-WL: Sound power level (2)	dB(A)	70	70	72	72	72	72	73	73
Operating Weight	kg	530	510	575	540	645	605	660	625

LEW W		141	142	144	161	162	164	181	182	184
Heating capacity (1)	kW	170	170	171	190	190	191	225	225	218
Total power input (1)	kW	40,0	40,0	40,7	45,3	45,3	45,6	52,4	52,4	50,7
COP (1) (E)	-	4,24	4,23	4,19	4,19	4,19	4,19	4,29	4,29	4,31
Water flow rate user side (1)	l/h	29344	29316	29540	32830	32846	33016	38942	38889	37800
Pressure drop, user side (1)	kPa	51	51	52	57	57	58	51	50	48
Water flow rate source side (1)	l/h	38059	38001	38191	42442	42474	42688	50616	50535	49162
Pressure drop, source side (1)	kPa	86	86	86	94	94	94	84	84	81
Power supply	V - ph - Hz	400 - 3N - 50								
FLA Maximum absorbed current	A	91	91	92	102	102	100	116	116	122
LRA Inrush current (without accessories)	A	289	289	197	298	298	211	361	361	250
LRA Inrush current (with softstarter)	A	224	224	140	233	233	152	278	278	184
n° of scroll compressor/ circuits	Nr.	2 / 2	2 / 1	4 / 2	2 / 2	2 / 1	4 / 2	2 / 2	2 / 1	4 / 2
LEW-WS: Sound power level (2)	dB(A)	77	77	80	77	77	80	78	78	81
LEW-WL: Sound power level (2)	dB(A)	73	73	76	73	73	76	74	74	77

(1) Water temperature - user side 40/45°C, water temperature - dissipation side 10/7 °C (14511:2011)
(2) Sound power level measured according to UNI EN ISO 9614
(E) EUROVENT certified data



Rated technical data of LEW W non reversible heat pumps

LEW W		204	214	243	244	283	284	314	344
Heating capacity (1)	kW	237	258	290	299	334	339	376	409
Total power input (1)	kW	55,9	60,1	66,9	67,9	77,9	78,7	89,8	97,1
COP (1) (E)	-	4,24	4,29	4,34	4,41	4,29	4,31	4,19	4,21
Water flow rate user side (1)	l/h	40982	44703	50201	51848	57875	58631	65061	70840
Pressure drop, user side (1)	kPa	57	54	57	33	41	43	53	51
Water flow rate source side (1)	l/h	53122	58132	65483	67620	75020	76063	83902	91484
Pressure drop, source side (1)	kPa	92	88	93	60	71	73	88	85
Power supply	V - ph - Hz	400 - 3N - 50							
FLA Maximum absorbed current	A	132	142	153	159	174	182	204	218
LRA Inrush current (without accessories)	A	321	328	336	301	401	355	374	437
LRA Inrush current (with softstarter)	A	256	263	271	239	318	290	309	354
n° of scroll compressor/ circuits	Nr.	4 / 2	4 / 2	3 / 1	4 / 2	3 / 1	4 / 2	4 / 2	4 / 2
LEW-WS: Sound power level (2)	dB(A)	81	81	81	82	81	82	82	83
LEW-WL: Sound power level (2)	dB(A)	77	77	77	78	77	78	78	79
Operating Weight	kg	1110	1065	1120	1270	1180	1340	1420	1470

LEW W		374	424	484	485	535	576	636
Heating capacity (1)	kW	444	505	569	560	627	670	748
Total power input (1)	kW	105	120	132	130	152	157	184
COP (1) (E)	-	4,25	4,21	4,29	4,31	4,12	4,26	4,07
Water flow rate user side (1)	l/h	76847	87416	98452	96906	108514	115860	129453
Pressure drop, user side (1)	kPa	51	52	54	50	61	60	73
Water flow rate source side (1)	l/h	99445	112768	127813	125808	139402	150278	166033
Pressure drop, source side (1)	kPa	84	85	86	85	102	101	121
Power supply	V - ph - Hz	400 - 3N - 50						
FLA Maximum absorbed current	A	232	281	302	290	353	348	424
LRA Inrush current (without accessories)	A	442	490	525	552	551	610	621
LRA Inrush current (with softstarter)	A	359	420	454	406	495	464	565
n° of scroll compressor/ circuits	Nr.	4 / 2	4 / 2	4 / 2	5 / 2	5 / 2	6 / 2	6 / 2
LEW-WS: Sound power level (2)	dB(A)	83	83	86	84	84	85	85
LEW-WL: Sound power level (2)	dB(A)	79	79	82	80	80	81	81

(1) Water temperature - user side 40/45°C, water temperature - dissipation side 10/7 °C (14511:2011)
(2) Sound power level measured according to UNI EN ISO 9614
(E) EUROVENT certified data

Rated technical data of LEW H reversible heat pumps

LEW H		041	042	051	052	061	062	071	072
Cooling capacity (1) (E)	kW	48,3	47,6	56,4	56,2	64,9	64,9	73,5	73,4
Total power input (1) (E)	kW	11,1	10,5	13,6	13,5	14,7	14,7	17,0	17,0
EER (1) (E)	-	4,35	4,53	4,17	4,16	4,42	4,42	4,32	4,32
ESEER (E)	-	5,61	6,04	5,39	5,78	5,73	6,11	5,59	6,01
Eurovent Efficiency class (E)		C	C	D	D	C	C	C	C
Water flow rate user side (1)	l/h	8364	8219	9743	9724	11236	11212	12695	12685
Pressure drop, user side (1) (E)	kPa	34,0	33,0	44,0	44,0	45,0	45,0	43,0	43
Water flow rate source side (1)	l/h	10171	9919	11907	11888	13610	13582	15433	15422
Pressure drop, source side (1) (E)	kPa	46	44	62	61	47	47	61	61
Heating capacity (2) (E)	kW	55,5	54,3	65,3	65,4	74,0	74,1	84,5	84,6
Total power input (2) (E)	kW	13,6	13,0	16,4	16,3	17,9	18,0	20,8	20,8
COP (2) (E)	-	4,07	4,18	3,99	4,00	4,12	4,13	4,07	4,08
Eurovent Efficiency Class		C	B	C	C	C	C	C	C
Water flow rate user side (2)	l/h	9578	9376	11270	11282	12791	12803	14596	14611
Pressure drop, user side (2) (E)	kPa	42	40	56	56	42	42	55	55
Water flow rate source side (2)	l/h	12314	12146	14444	14467	16521	16540	18775	18806
Pressure drop, source side (2) (E)	kPa	67	66	90	90	90	90	88	88
Power supply	V - ph - Hz	400 - 3N - 50Hz							
FLA Maximum absorbed current	A	30	30	37	37	40	40	46	46
LRA Inrush current (without accessories)	A	111	111	156	156	157	157	164	164
LRA Inrush current (with softstarter)	A	73	73	83	83	102	102	107	107
n° of scroll compressor/ circuits	Nr.	2 / 2	2 / 1	2 / 2	2 / 1	2 / 2	2 / 1	2 / 2	2 / 1
LEW-HS: Sound power level (3) (E)	dB(A)	72	72	72	72	73	73	73	73
LEW-HL: Sound power level (3) (E)	dB(A)	68	68	68	68	69	69	69	69

LEW H		081	082	091	092	111	112	131	132
Cooling capacity (1) (E)	kW	84,7	84,6	93,9	94	114	114	130	130
Total power input (1) (E)	kW	18,4	18,5	21,1	21,1	24,3	24,3	28,3	28,3
EER (1) (E)	-	4,60	4,60	4,45	4,45	4,68	4,68	4,58	4,59
ESEER (E)	-	5,89	6,25	5,81	6,25	6,05	6,48	6,00	6,43
Eurovent Efficiency class (E)		C	C	C	C	B	B	C	C
Water flow rate user side (1)	l/h	14621	14604	16214	16228	19647	19634	22354	22375
Pressure drop, user side (1) (E)	kPa	34	34	42	42	37	37	45	45
Water flow rate source side (1)	l/h	17616	17601	19630	19645	23617	23607	26943	26965
Pressure drop, source side (1) (E)	kPa	47	47	58	58	48	48	61	61
Heating capacity (2) (E)	kW	96	96	108	108	129	129	148	148
Total power input (2) (E)	kW	23	23	26	26	30	30	35	35
COP (2) (E)	-	4,25	4,25	4,15	4,14	4,28	4,28	4,20	4,19
Eurovent Efficiency Class		B	B	B	C	B	B	B	B
Water flow rate user side (2)	l/h	16607	16614	18576	18580	22295	22307	25511	25508
Pressure drop, user side (2) (E)	kPa	42	42	52	52	43	43	55	55
Water flow rate source side (2)	l/h	21552	21561	23972	23970	28958	28986	33026	33009
Pressure drop, source side (2) (E)	kPa	68	68	85	85	74	74	90	90
Power supply	V - ph - Hz	400 - 3N - 50Hz							
FLA Maximum absorbed current	A	50	50	61	61	70	71	79	79
LRA Inrush current (without accessories)	A	176	176	203	203	238	275	244	244
LRA Inrush current (with softstarter)	A	117	117	137	137	176	210	182	182
n° of scroll compressor/ circuits	Nr.	2 / 2	2 / 1	2 / 2	2 / 1	4 / 2	2 / 1	2 / 2	2 / 2
LEW-HS: Sound power level (3) (E)	dB(A)	74	74	76	76	76	77	77	77
LEW-HL: Sound power level (3) (E)	dB(A)	70	70	72	72	72	73	73	73

(1) Water temperature - user side 12/7°C, water temperature - dissipation side 30/35 °C (14511:2011)
(2) Water temperature - user side 40/45°C, water temperature - dissipation side 10/7 °C (14511:2011)
(3) Sound power level measured according to UNI EN ISO 9614
(E) EUROVENT certified data



Rated technical data of LEW H reversible heat pumps

LEW H		141	142	144	161	162	164	181	182	184
Cooling capacity (1) (E)	kW	149	149	149	166	167	167	199	199	193
Total power input (1) (E)	kW	32,5	32,5	33,4	37,0	37,0	36,9	42,9	42,9	41,2
EER (1) (E)	-	4,58	4,59	4,46	4,49	4,50	4,53	4,63	4,63	4,68
ESEER (E)	-	5,90	6,17	6,09	5,80	6,17	6,24	5,84	6,29	6,33
Eurovent Efficiency class (E)		C	C	C	C	C	C	C	C	B
Water flow rate user side (1)	l/h	25693	25727	25692	28683	28730	28873	34252	34226	33248
Pressure drop, user side (1) (E)	kPa	42	42	42	47	47	47	41	41	40
Water flow rate source side (1)	l/h	30993	31025	31136	34717	34767	34889	41289	41261	40016
Pressure drop, source side (1) (E)	kPa	57	57	58	63	63	64	56	56	54
Heating capacity (2) (E)	kW	170	170	171	190	190	191	225	225	218
Total power input (2) (E)	kW	40,0	40,0	40,7	45,3	45,3	45,6	52,4	52,4	50,7
COP (2) (E)	-	4,24	4,23	4,19	4,19	4,19	4,19	4,29	4,29	4,31
Eurovent Efficiency Class		B	B	B	B	B	B	B	B	B
Water flow rate user side (2)	l/h	29344	29316	29540	32830	32846	33016	38942	38889	37800
Pressure drop, user side (2) (E)	kPa	51	51	52	57	57	58	51	50	48
Water flow rate source side (2)	l/h	38059	38001	38191	42442	42474	42688	50616	50535	49162
Pressure drop, source side (2) (E)	kPa	86	86	86	94	94	94	84	84	81
Power supply	V - ph - Hz	400 - 3N - 50Hz								
FLA Maximum absorbed current	A	91	91	92	102	102	100	116	116	122
LRA Inrush current (without accessories)	A	289	289	197	298	298	211	361	361	250
LRA Inrush current (with softstarter)	A	224	224	140	233	233	152	278	278	184
n° of scroll compressor/ circuits	Nr.	2 / 2	2 / 1	4 / 2	2 / 2	2 / 1	4 / 2	2 / 2	2 / 1	4 / 2
LEW-HS: Sound power level (3) (E)	dB(A)	77	77	80	77	77	80	78	78	81
LEW-HL: Sound power level (3) (E)	dB(A)	73	73	76	73	73	76	74	74	77

LEW H		204	214	243	244	283	284	314	344
Cooling capacity (1) (E)	kW	209	228	256	266	294	298	328	359
Total power input (1) (E)	kW	45,1	48,4	55	54	64	64	73	79,3
EER (1) (E)	-	4,63	4,71	4,70	4,88	4,62	4,67	4,47	4,52
ESEER (E)	-	6,46	6,44	6,37	6,62	6,34	6,21	6,15	6,13
Eurovent Efficiency class (E)		C	B	B	B	C	B	C	C
Water flow rate user side (1)	l/h	35970	39338	44169	45744	50710	51237	56518	61829
Pressure drop, user side (1) (E)	kPa	45	43	46	30	35	36	43	42
Water flow rate source side (1)	l/h	43340	47280	53105	54802	61268	61798	68600	74910
Pressure drop, source side (1) (E)	kPa	63	60	63	37	46	48	58	56
Heating capacity (2) (E)	kW	237	258	290	299	334	339	376	409
Total power input (2) (E)	kW	55,9	60,1	66,9	67,9	77,9	78,7	89,8	97,1
COP (2) (E)	-	4,24	4,3	4,34	4,41	4,29	4,3	4,19	4,21
Eurovent Efficiency Class		B	B	B	B	B	B	B	B
Water flow rate user side (2)	l/h	40982	44703	50201	51848	57875	58631	65061	70840
Pressure drop, user side (2) (E)	kPa	57	54	57	33	41	43	53	51
Water flow rate source side (2)	l/h	53122	58132	65483	67620	75020	76063	83902	91484
Pressure drop, source side (2) (E)	kPa	92	88	93	60	71	73	88	85
Power supply	V - ph - Hz	400 - 3N - 50Hz							
FLA Maximum absorbed current	A	174	142	153	159	174	182	204	218
LRA Inrush current (without accessories)	A	321	328	336	301	401	355	374	437
LRA Inrush current (with softstarter)	A	256	263	271	239	318	290	309	354
n° of scroll compressor/ circuits	Nr.	4 / 2	4 / 2	3 / 1	4 / 2	3 / 1	4 / 2	4 / 2	4 / 2
LEW-HS: Sound power level (3) (E)	dB(A)	81	81	81	82	81	82	82	83
LEW-HL: Sound power level (3) (E)	dB(A)	77	77	77	78	77	78	78	79

(1) Water temperature - user side 12/7°C, water temperature - dissipation side 30/35 °C (14511:2011)
(2) Water temperature - user side 40/45°C, water temperature - dissipation side 10/7 °C (14511:2011)
(3) Sound power level measured according to UNI EN ISO 9614
(E) EUROVENT certified data

Rated technical data of LEW H reversible heat pumps

LEW H		374	424	484	485	535	576	636
Cooling capacity (1) (E)	kW	390	445	505	492	548	588	653
Total power input (1) (E)	kW	85,4	95,0	106	106	120	129	145
EER (1) (E)	-	4,56	4,68	4,77	4,63	4,57	4,57	4,50
ESEER (E)	-	6,20	6,45	6,56	6,61	6,55	6,66	6,54
Eurovent Efficiency class (E)		C	B	B	C	C	C	C
Water flow rate user side (1)	l/h	67117	76633	86981	96906	108514	115860	129453
Pressure drop, user side (1) (E)	kPa	41	42	43	50	61	60	73
Water flow rate source side (1)	l/h	81217	92312	104466	125808	139402	150278	166033
Pressure drop, source side (1) (E)	kPa	56	58	60	85	102	101	121
Heating capacity (2) (E)	kW	488	538	617	560	627	670	749
Total power input (2) (E)	kW	100	110	127	130	152	157	184
COP (2) (E)	-	4,25	4,2	4,29	4,3	4,12	4,26	4,07
Eurovent Efficiency Class		B	B	B	B	C	B	C
Water flow rate user side (2)	l/h	76847	87416	98452	96906	108514	115860	129453
Pressure drop, user side (2) (E)	kPa	51	52	54	50	61	60	73
Water flow rate source side (2)	l/h	99445	112768	127813	125808	139402	150278	166033
Pressure drop, source side (2) (E)	kPa	84	85	86	85	102	101	121
Power supply	V - ph - Hz	400 - 3N - 50Hz						
FLA Maximum absorbed current	A	232	281	302	290	256	348	424
LRA Inrush current (without accessories)	A	442	490	525	552	551	610	621
LRA Inrush current (with softstarter)	A	359	420	454	406	495	464	565
n° of scroll compressor/ circuits	Nr.	4 / 2	4 / 2	4 / 2	5 / 2	5 / 2	6 / 2	5 / 2
LEW-HS: Sound power level (3) (E)	dB(A)	83	83	86	84	84	85	85
LEW-HL: Sound power level (3) (E)	dB(A)	79	79	82	80	80	81	81

(1) Water temperature - user side 12/7°C, water temperature - dissipation side 30/35 °C (14511:2011)
(2) Water temperature - user side 40/45°C, water temperature - dissipation side 10/7 °C (14511:2011)
(3) Sound power level measured according to UNI EN ISO 9614
(E) EUROVENT certified data

Dimensional drawings

LEW 041 - 092

C - D - H VERSIONS - LEGEND

1	Recovery side - inlet (m 1" gas)
2	Recovery side - outlet (m 1" gas)
3	User interface
4	Dissipation side - outlet (Victaulic 2½")
5	Dissipation side - inlet (Victaulic 2½")
6	User side - inlet (Victaulic 2½")
7	User side - outlet (Victaulic 2½")
8	Power supply input

W VERSIONS - LEGEND

1	Recovery side - inlet (m 1" gas)
2	Recovery side - outlet (m 1" gas)
3	User interface
4	User side - outlet (Victaulic 2½")
5	User side - inlet (Victaulic 2½")
6	Dissipation side - inlet (Victaulic 2½")
7	Dissipation side - outlet (Victaulic 2½")
8	Power supply input

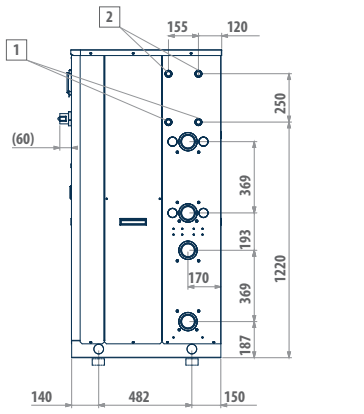

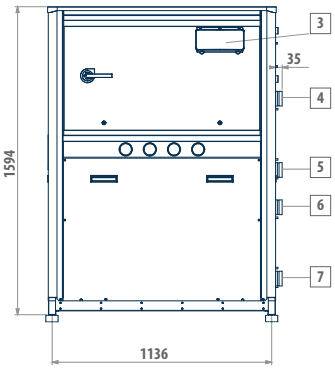

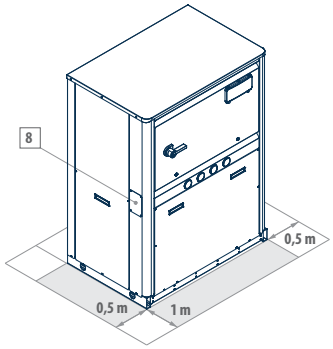

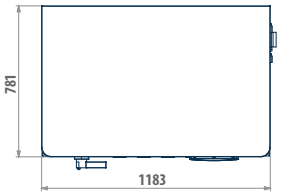



Dimensional drawings

LEW 111 - 182

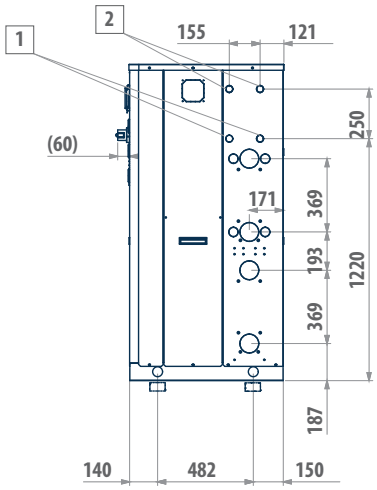

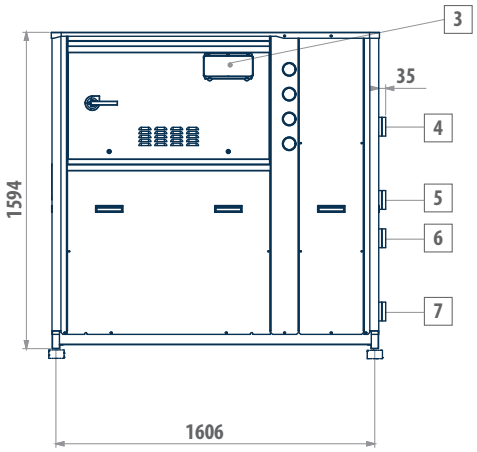

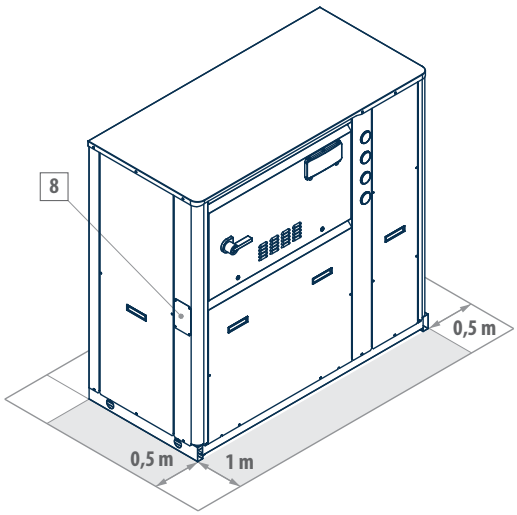

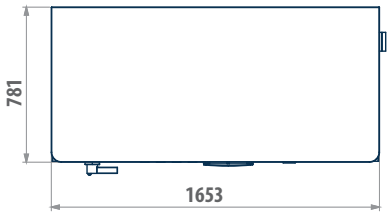

C - D - H VERSIONS - LEGEND	
1	Recovery side - inlet (m 1" gas)
2	Recovery side - outlet (m 1" gas)
3	User interface
4	Dissipation side - outlet (Victaulic 2½")
5	Dissipation side - inlet (Victaulic 2½")
6	User side - inlet (Victaulic 2½")
7	User side - outlet (Victaulic 2½")
8	Power supply input

W VERSIONS - LEGEND	
1	Recovery side - inlet (m 1" gas)
2	Recovery side - outlet (m 1" gas)
3	User interface
4	User side - outlet (Victaulic 2½")
5	User side - inlet (Victaulic 2½")
6	Dissipation side - inlet (Victaulic 2½")
7	Dissipation side - outlet (Victaulic 2½")
8	Power supply input

Dimensional drawings

LEW 144 - 244

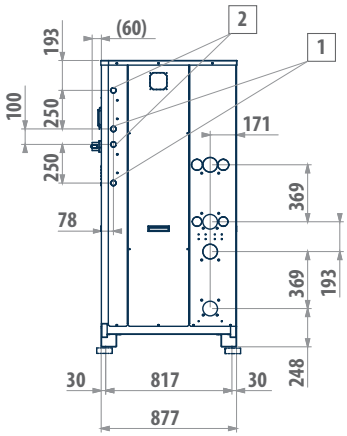

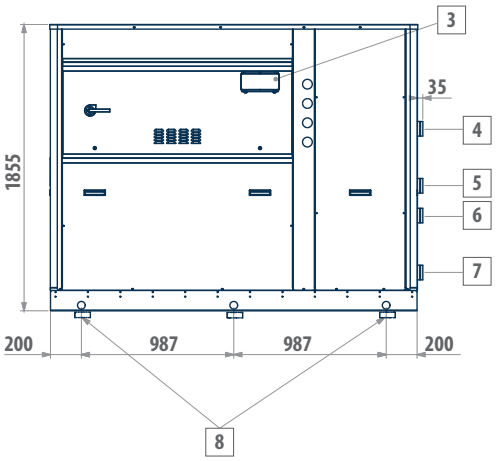

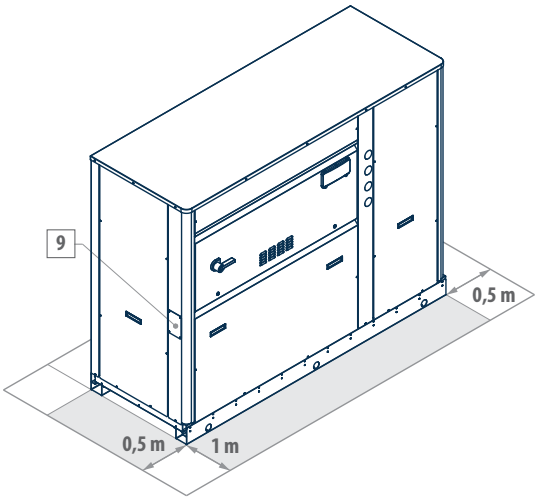

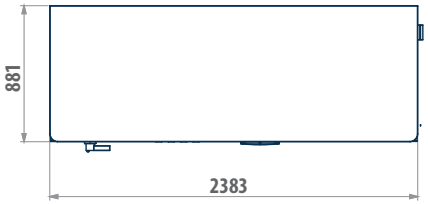

Model	Version
LEW 144	C - D - H - W
LEW 164	C - D - H - W
LEW 184	C - D - H - W
LEW 204	C - D - H - W
LEW 214	C - D - H - W
LEW 243	C - W
LEW 244	C - W

C - D - H VERSIONS - LEGEND

1	Recovery side - inlet (m 1" gas)
2	Recovery side - outlet (m 1" gas)
3	User interface
4	Dissipation side - outlet (Victaulic 2½")
5	Dissipation side - inlet (Victaulic 2½")
6	User side - inlet (Victaulic 2½")
7	User side - outlet (Victaulic 2½")
8	Fastening points
9	Power supply input

W VERSIONS - LEGEND

1	Recovery side - inlet (m 1" gas)
2	Recovery side - outlet (m 1" gas)
3	User interface
4	User side - outlet (Victaulic 2½")
5	User side - inlet (Victaulic 2½")
6	Dissipation side - inlet (Victaulic 2½")
7	Dissipation side - outlet (Victaulic 2½")
8	Fastening points
9	Power supply input



Dimensional drawings

LEW 243 - 484

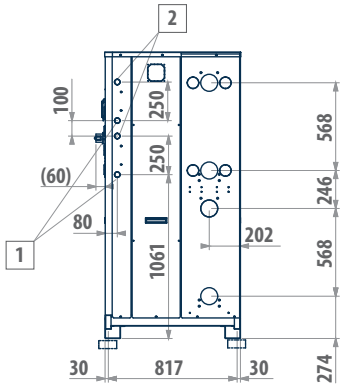

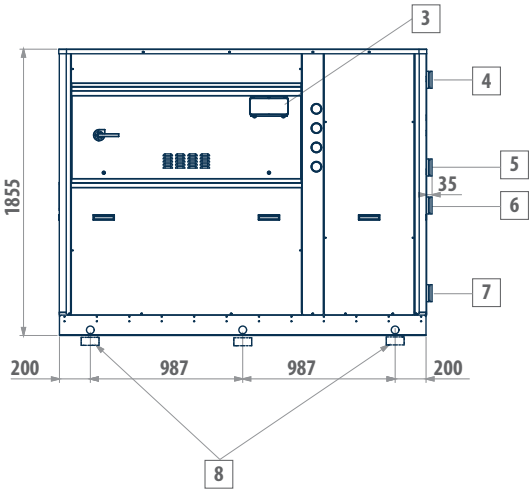

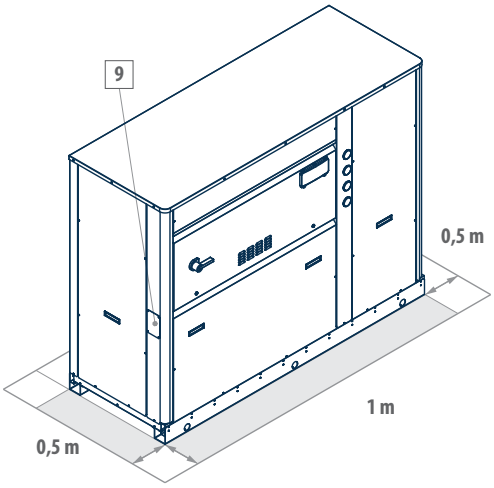

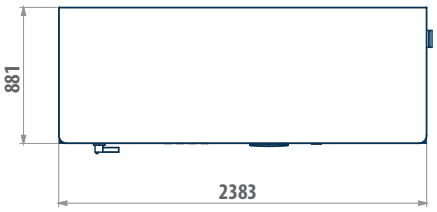

Model	Version
LEW 243	D - H - W
LEW 244	D - H - W
LEW 283	D - H - W
LEW 284	D - H - W
LEW 314	D - H - W
LEW 344	D - H - W
LEW 374	D - H - W
LEW 424	D - H - W
LEW 484	D - H - W

D - H VERSIONS - LEGEND	
1	Recovery side - inlet (m 1" gas)
2	Recovery side - outlet (m 1" gas)
3	User interface
4	Dissipation side - outlet (Victaulic 3")
5	Dissipation side - inlet (Victaulic 3")
6	User side - inlet (Victaulic 3")
7	User side - outlet (Victaulic 3")
8	Fastening points
9	Power supply input

W VERSIONS - LEGEND	
1	Recovery side - inlet (m 1" gas)
2	Recovery side - outlet (m 1" gas)
3	User interface
4	User side - outlet (Victaulic 3")
5	User side - inlet (Victaulic 3")
6	Dissipation side - inlet (Victaulic 3")
7	Dissipation side - outlet (Victaulic 3")
8	Fastening points
9	Power supply input

Dimensional drawings

LEW 283 - 484

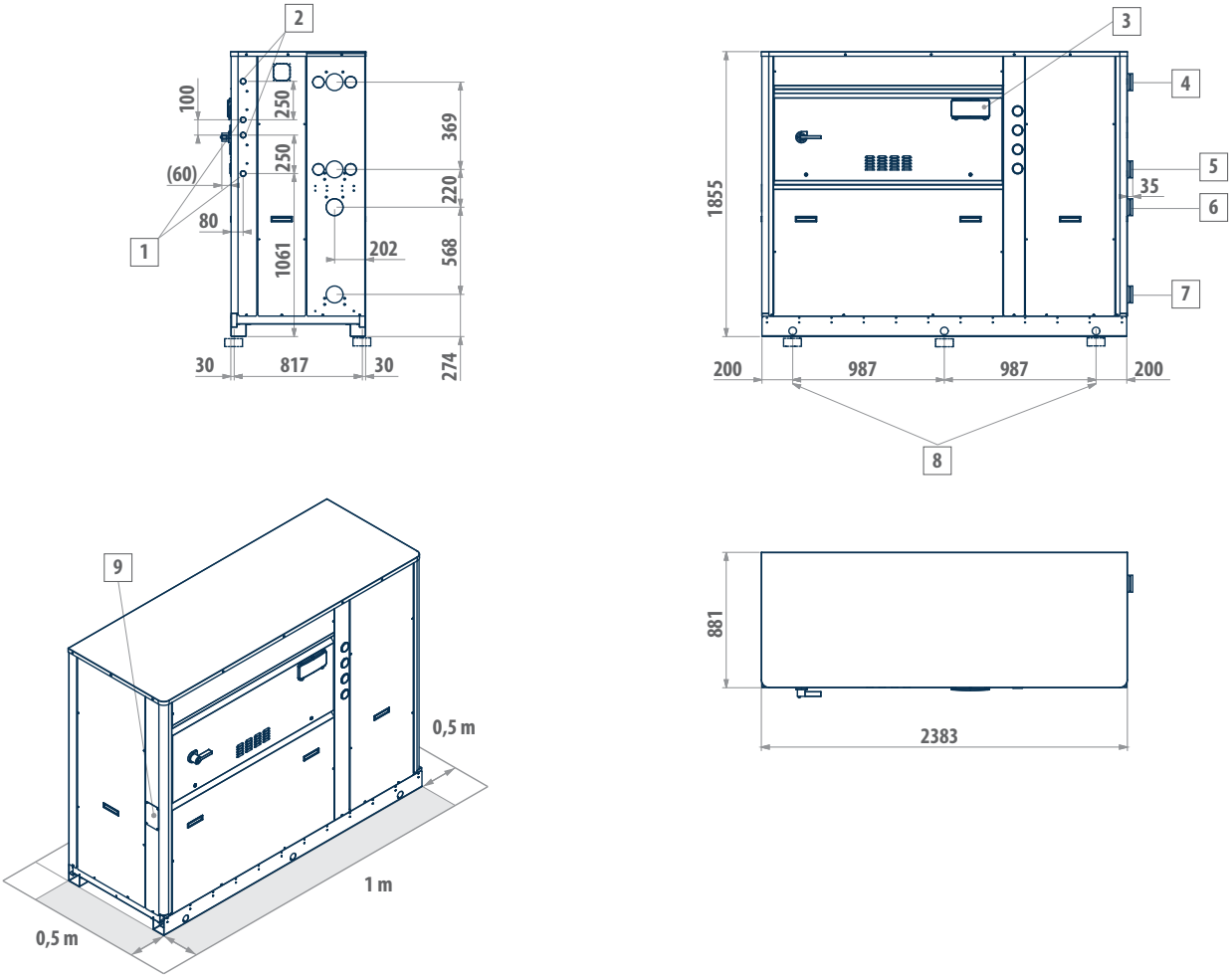

Model	Version
LEW 283	C
LEW 284	C
LEW 314	C
LEW 344	C
LEW 374	C
LEW 424	C
LEW 484	C

C VERSIONS - LEGEND

1	Recovery side - inlet (m 1" gas)
2	Recovery side - outlet (m 1" gas)
3	User interface
4	Dissipation side - outlet (Victaulic ")
5	Dissipation side - inlet (Victaulic 2½")
6	User side - inlet (Victaulic 3")
7	User side - outlet (Victaulic 3")
8	Fastening points
9	Power supply input



Dimensional drawings

LEW 485 - 636

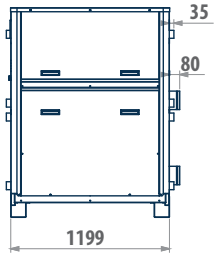

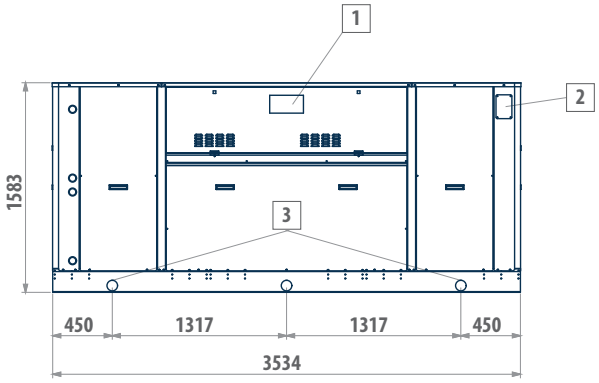

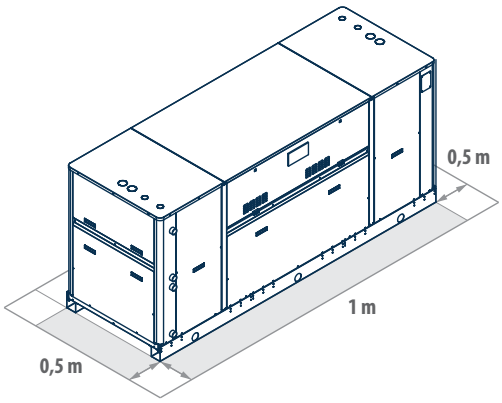

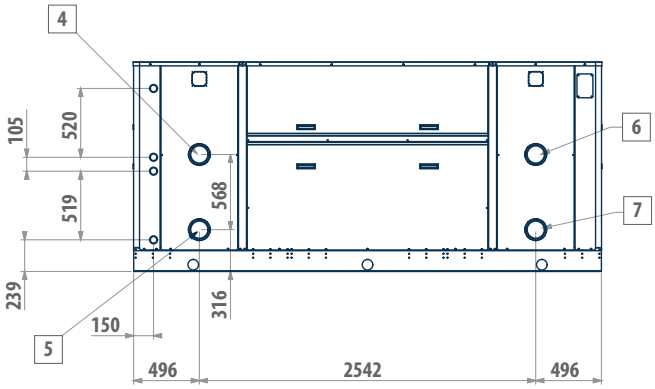

Model	Version
LEW 485	C - D - H - W
LEW 535	C - D - H - W
LEW 576	C - D - H - W
LEW 636	C - D - H - W

C - D - H VERSIONS - LEGEND

1	User interface
2	Power supply input
3	Fastening points
4	Dissipation side - outlet (Victaulic 5”)
5	Dissipation side - inlet (Victaulic 5”)
6	User side - inlet (Victaulic 5”)
7	User side - outlet (Victaulic 5”)

W VERSIONS - LEGEND

1	User interface
2	Power supply input
3	Fastening points
4	Dissipation side - inlet (Victaulic 5”)
5	Dissipation side - outlet (Victaulic 5”)
6	User side - outlet (Victaulic 5”)
7	User side - inlet (Victaulic 5”)

Galletti
AIR CONDITIONING



MULTI-PURPOSE

Introduction	p. 266
HIWARM	p. 268
HIWARM COMPACT	p. 276
MCP	p. 282
LCP	p. 292
LEP	p. 310



TOTAL HEAT RECOVERY MULTI-PURPOSE HEAT PUMPS

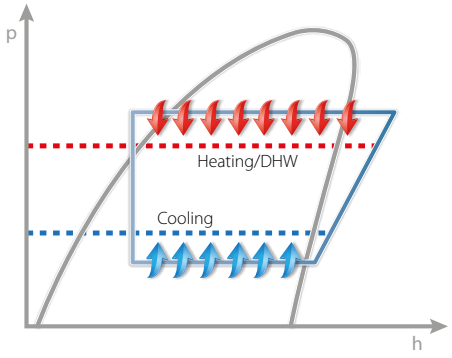

Energy saving thanks to a total recovery

Galletti multi-purpose heat pumps are total recovery units used for a simultaneous hot and cold water production. Available for a 2-pipe system, DHW production under request, or a 4-pipe system, designed for service and residential sectors.
As well as winter heating and summer air conditioning, in case of a 2-pipe air-conditioning systems in which, thermal power for the DHW production is required, Galletti multi-purpose systems are equipped with a plate heat exchanger used for the DHW production.
Thanks to the advanced technology of these systems, they can satisfy this request in every season, also when there is no need of air-conditioning, but that's not all! They can do that efficiently by using the total recovery of condensation heat available during cooling phase.

Production of chilled water with total condensation heat recovery for DHW production

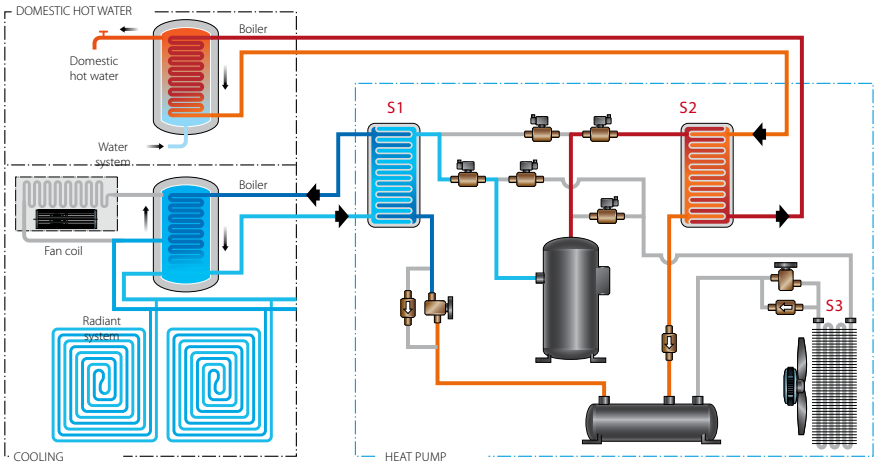

LEGEND:
S1: "user side" plate exchanger
S2: "DHW production side" plate exchanger
S3: Finned block heat exchanger



Partial load efficiency

It is necessary to guarantee that the generation system provides high values of COP/EER even in partial load efficiency which, often, corresponds to the greatest number of working hours in a seasonal cycle.
According to Galletti multi-purpose series, this purpose is achieved through a meticulous thermodynamic design of all main components.
As for the multi-purpose heat pumps which have one cooling circuit, it is possible to modulate the thermal power released through the variation of frequency in the single compressor activated by a BLDC motor.
When on-off compressors are used, high efficiency is guaranteed also for partial loads through different steps of operation due to compressors, divided in one or two thermodynamic circuits.

Additional total recovery heat pumps compared to traditional generation systems.

- High renewable energy availability can be obtained from the environment using different methods.
- Respect for the environment through energy efficiency due to the excellent COP and EER values
- Reduction in the consumption of fossil energy (ideal for photovoltaic systems combinations)
- Risks of explosion, fire and indoor burning materials poisoning prevented
- Totally programmable with the possibility of remote management and on line assistance
- Low maintenance due to the absence of wearing parts
- Low-Noise execution
- No CO_2 and local harmful emissions
- It does not pollute and it can be fueled by renewable energy sources
- Maximum savings on running costs combined with high environmental sustainability
- One unit substituting boilers and air-conditioning units



Air/water split-system with BLDC inverter compressor

HIWARM 12 - 33 kW





Multi-purpose unit - 2-pipe system | Total heat recovery multi-purpose unit | BLDC scroll compressor | R-410A refrigerant | Cooling / Heating | Axial fans | Split execution

PLUS

- Total heat recovery for DHW production
- Twin-rotary compressor or scroll activated by an electronically controlled BLCD motor
- Electronically controlled electric expansion valve
- Double cycle reversal: refrigerant and water side
- BLDC circulators with stainless steel impeller for system and DHW
- Access to the tax incentives provided for energy retrofitting

The perfect combination between multi-purpose, inverter technology and style

The multi-purpose system HIWARM is the most evolved and efficient solution for conditioning and for the production of DHW in residential or commercial applications: thanks to the total recovery of condensation heat, it is possible to obtain thermal power in a totally free way during summer conditioning.
HIWARM is composed of an outdoor and indoor unit created to be installed in a technical room.
Inside the indoor unit , the compressor, heat exchangers of the systems, hydronic kits, management switchboard and all the main components of the cooling circuit are housed; instead, in the external unit, extremely versatile, there are finned exchanger and electric fans.
This solution has the remarkable advantage to keep all hydraulic circuits inside the building thus avoiding the need to protect the system from the risk of freezing through the use of heating elements or by adding glycol-based materials. Both these solutions inevitably lead to an increase of the consumption of electrical energy.
Moreover, the external unit thus created has a double advantage: it can be easily installed both vertically and horizontally and, since it is particularly lightweight, doesn't need expensive supporting structures.
HIWARM includes the state of the art as regards cooling and hydraulic components: from the compressor activated by a BLDC motor to maximize energetic efficiency in every operating mode, to the axial fans with airfoil blades and external rotor motor, from the high-efficiency plate heat exchangers to the electronically-controlled electrical expansion valve managed by a PID regulation algorithm.
The thermal exchange has been optimized in every operating mode through the use of a 4-way reverse cycle valve on the water side to always keep opposite the flow of refrigerant and thermal fluids, thus extending the operating range of the unit.

The modulation of capacity facilitates the variation of the thermal load of the building. During the operation and production of DHW, HIWARM transfers all its available power to compensate, in the most efficient way, the withdrawal of domestic hot water.

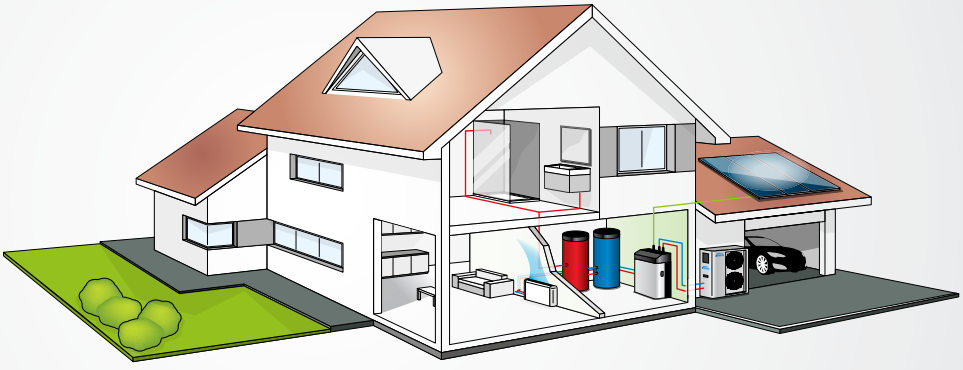



MAIN COMPONENTS

Outdoor unit

Finned coil made of copper pipes mechanically fixed to steel fins, accurately designed to minimize defrosting phase and optimize the efficiency of thermal exchange in every operating mode. It is available with horizontal and vertical air flow.



Indoor unit

Made of painted sheetEnclosing panels made of painted galvanized sheet with polymerized epoxy-polyester powders and available in four different colours for a pleasant aesthetic.

Electronically controlled electric expansion valve

Together with the compressor, it is the key element for the operation of the unit. Thanks to the PID algorithm that regulates it, it is capable of quickly adjusting to every working condition and maintain the cooling cycle steady.

Compressor

Twin-rotary or scroll hermetic compressor activated by BLDC permanent magnet motor and included in a completely sound-proof panelling, isolated from the main structure through anti-vibrating rubber dampers.

Microprocessor control

The cutting-edge microprocessor control includes a high-technology software developed by Galletti which allows the complete and efficient management of IWARM units.



Hydraulic kit

Centrifugal circulators activated by BLDC electrical motors with stainless steel impeller and managed by the control panel of the unit to adjust the flow rate of water according to operating conditions and keep the compressor within its operating range.

CONFIGURATION

The models are completely configurable by selecting the version and the options. To the right is shown an example of configuration.

Version	Optional ▶	1	2	3	4	5	6	7	8	9
HWM012M0		4	7	7	0	C	0	0	A	0

To verify the compatibility of the options, use the selection software or the price list.

AVAILABLE VERSIONS

Total heat recovery multi-purpose unit

HWM…MO Indoor unit for 2-pipe system + external remote unit with horizontal air flow
HWM…MV Indoor unit for 2-pipe system + external remote unit with vertical air flow
HWM…MI Indoor unit for 2-pipe system + indoor remote unit with ducted air flow (EC fans standard)

CONFIGURATION OPTIONS

1 - POWER SUPPLY
- **4** 230/1/50 + Inverter + Thermal magnetic circuit breakers (size 012 only)
- **5** 400/3/50 + Inverter + Thermal magnetic circuit breakers

2 - WATER PUMP ON USER SIDE
- **7** Modulating BLDC single pump

3 - WATER PUMP ON RECOVERY SIDE
- **7** Modulating BLDC single pump

4 - REMOTE COMMUNICATION
- **0** Absent
- **1** RS485 Serial board (Modbus or Carel protocol)
- **2** Lonworks serial board
- **3** GSM modem kit
- **4** Ethernet pCOWEB board (SNMP or BACNET protocol)
- **6** pCOWEB Ethernet card + "GWEB" supervision software

5 - AIR-FLOW MODULATION IN THE REMOTE UNIT
- **C** Condensation control with fans adjusted by potentiometer
- **E** Condensation control, "EC brushless" electronically controlled fans (V_O versions only)

6 - REMOTE CONTROL
- **0** Absent
- **3** Remote display for pCO

7 - PACKING
- **0** Standard
- **1** Wooden crate
- **2** Wooden case

8 - EXTERIOR COLOUR
- **B** White - RAL 9016 polish
- **A** Silver grey - RAL 9006 metallised
- **G** Dark grey - RAL 7016 metallised
- **P** Blue - RAL 7031 polish
- **R** Bordeaux - RAL 3003 polish

9 - SPECIAL HEAT EXCHANGERS
- **0** Standard heat exchangers with hydrophilic treatment
- **R** Copper / copper
- **C** Cataphoresis
- **B** Fins pre-coated with epoxy paint

ACCESSORIES

A Heat exchanger protection net for outdoor unit
B Four water pipe GAS threaded fittings
C Normative reference other than "97/23/CE - PED"
D Inversion kit for system tank

Rated technical data

HIWARM		HIWARM 012		HIWARM 022		HIWARM 033	
Power supply	V-ph-Hz	230 - 1 - 50		400 - 3N - 50		400 - 3N - 50	
Compressor status		min	max	min	max	min	max
Cooling mode (1)							
Cooling Capacity	kW	3,04	11,2	9,20	23,2	9,57	32,0
Total power input	kW	0,78	3,31	2,41	7,60	2,39	11,3
EER		3,91	3,39	3,82	3,05	4,01	2,82
ESEER		5,65	5,65	5,30	5,30	5,24	5,24
User Water Flow Rate	l/h	522	1938	1583	3998	1646	5525
User Water Pressure Drops	kPa	<5	19	<5	21	<5	17
User side water pump available pressure head	kPa	67	43	116	98	118	94
Cooling mode +DHW (2)							
Heating Capacity	kW	2,76	10,6	8,65	22,7	8,95	31,8
Total power input	kW	0,75	3,55	2,47	7,78	2,37	11,4
Heating capacity DHW	kW	3,41	13,7	10,8	29,6	11,0	41,9
COP		8,25	6,85	7,90	6,73	8,43	6,45
User Water Flow Rate	l/h	474	1830	1489	3919	1540	5479
User Water Pressure Drops	kPa	<5	17	<5	20	<5	17
User side water pump available pressure head	kPa	67	46	116	99	118	95
DHW Water Flow Rate	l/h	592	2371	1877	5109	1917	7236
DHW Water Pressure Drops	kPa	<5	27	5	32	<5	28
DHW side water pump available pressure head	kPa	66	28	114	81	116	69
Heating mode or DHW (3)							
Heating Capacity	kW	2,98	12,0	9,56	25,7	9,77	36,0
Total power input	kW	0,89	3,57	2,66	7,76	2,68	11,4
COP		3,33	3,36	3,59	3,31	3,65	3,15
User Water Flow Rate	l/h	517	2071	1658	4441	1696	6225
User Water Pressure Drops	kPa	<5	22	<5	25	<5	21
User side water pump available pressure head	kPa	66	38	115	91	117	85
General Data							
Maximum absorbed current	A	22		22		33	
n° of scroll compressor/ circuits	-	1/1					
Sound power level (4)	dB(A)	54		55		57	
Weight without accessories	kg	199		268		277	
Weight with pump and tank	kg	190		260		270	

(1) Water temperature 12/7 °C, outdoor air temperature 35 °C (UNI EN 14511:2011)
(2) Chilled water temperature 12/7 °C, recovery water temperature 40/45 °C
(3) Water temperature 40/45 °C, outdoor air temperature 7 °C D.B. - 6 °C W.B. (UNI EN 14511:2011)
(4) Sound power level measured according to UNI EN ISO 9614



Dimensional drawings

HIWARM 012 INDOOR UNIT

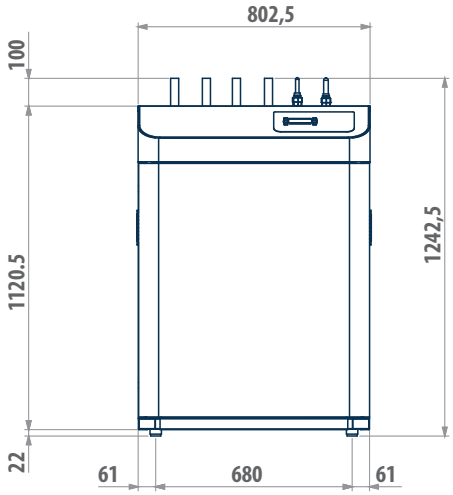

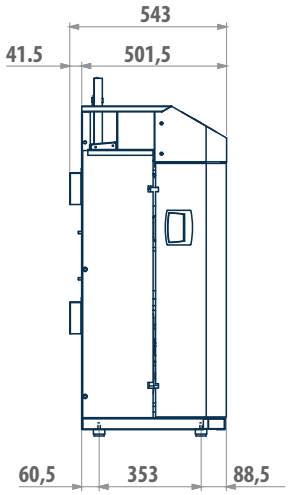

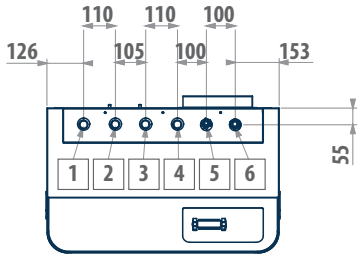

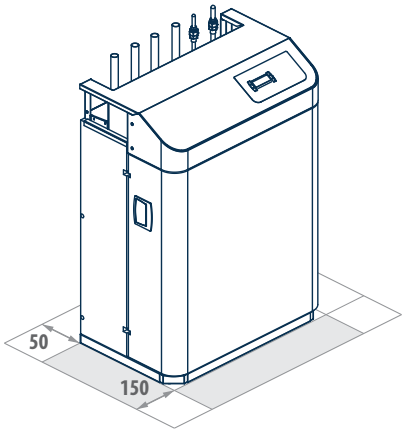

LEGEND

1	Water outlet - air conditioning system	Copper pipe	Ø28
2	Water inlet- air conditioning system	Copper pipe	Ø28
3	Water outlet - DHW system	Copper pipe	Ø28
4	Water inlet - DHW system	Copper pipe	Ø28
5	Liquid line	Rotalock	Ø12
6	Gas line	Rotalock	Ø16

Dimensional drawings

HIWARM 012 EXTERNAL UNIT WITH HORIZONTAL AIR FLOW

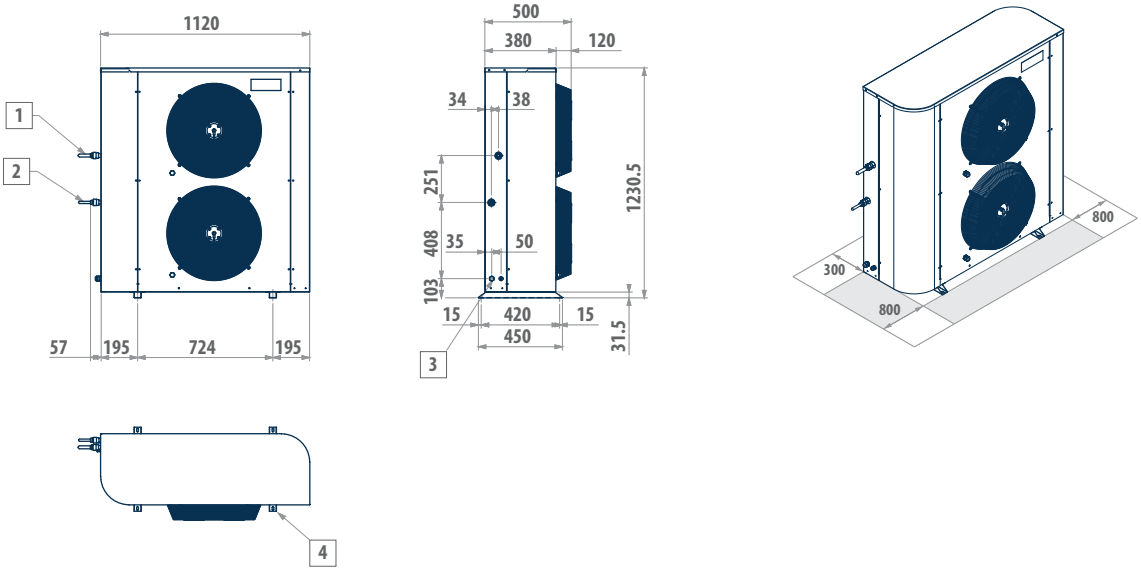

HIWARM 012 EXTERNAL UNIT WITH VERTICAL AIR FLOW

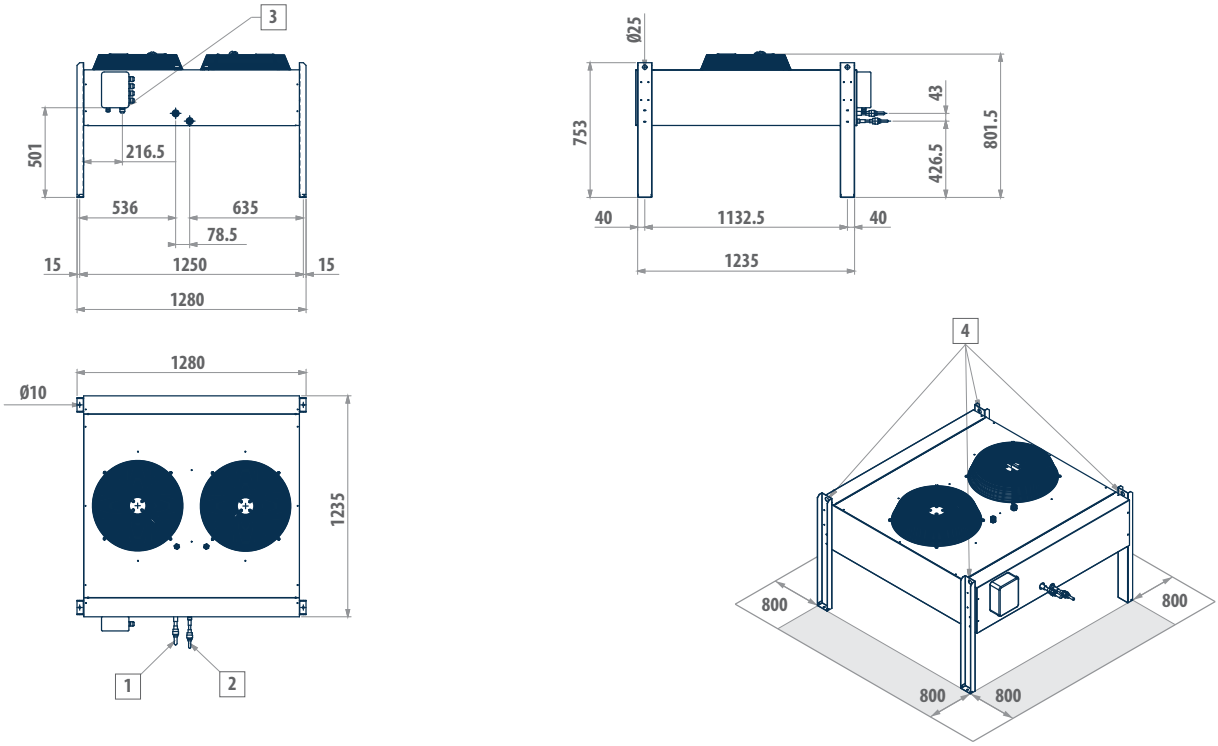

LEGEND

1	Gas line	Rotalock	Ø16
2	Liquid line	Rotalock	Ø12
3	Power supply		
4	Fastening holes		



Dimensional drawings

HIWARM 022 - 033 INDOOR UNIT

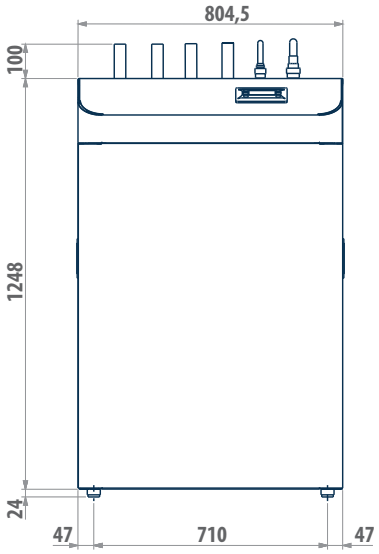

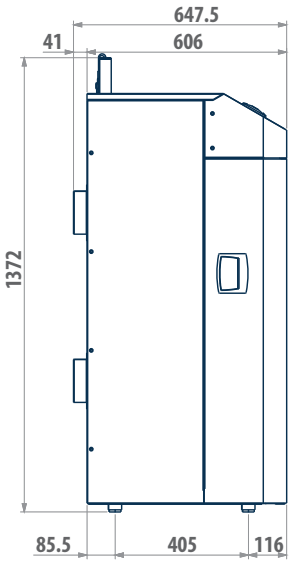

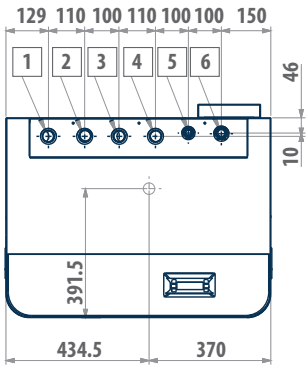

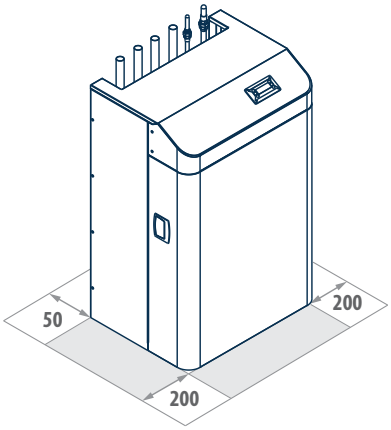

LEGEND

	Plumbing connections		
1	Water outlet - air conditioning system	Copper pipe	Ø35
2	Water inlet- air conditioning system	Copper pipe	Ø35
3	Water outlet - DHW system	Copper pipe	Ø35
4	Water inlet - DHW system	Copper pipe	Ø35
5	Liquid line	Rotalock	Ø12
6	Gas line	Rotalock	Ø22

Dimensional drawings

HIWARM 022 EXTERNAL UNIT WITH HORIZONTAL AIR FLOW

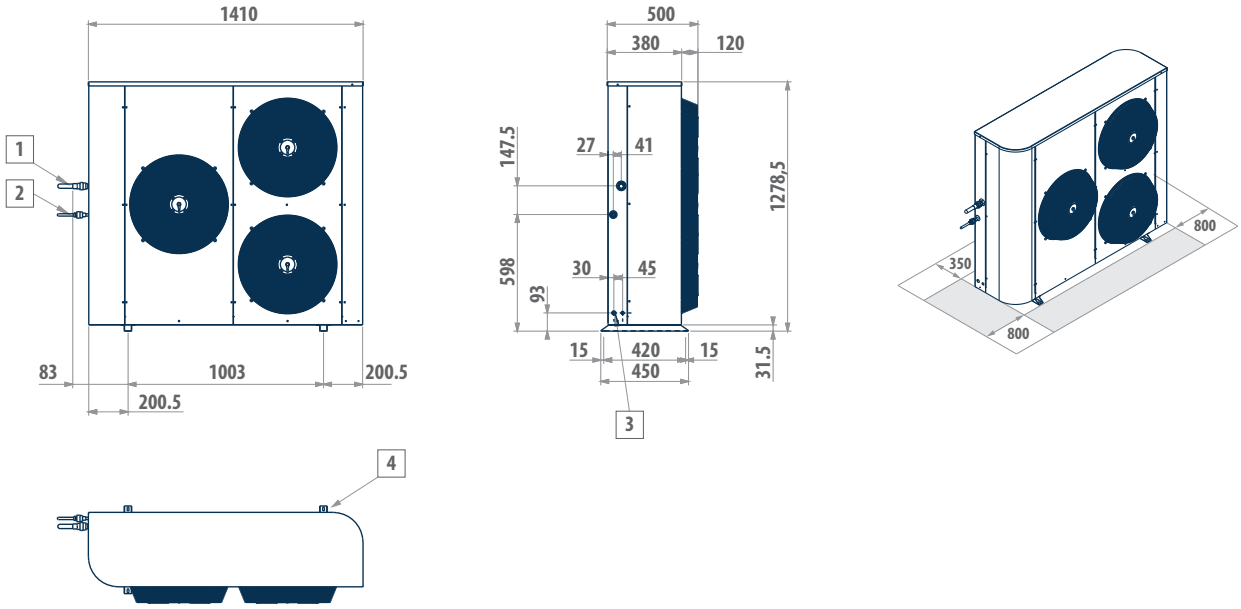

HIWARM 022 EXTERNAL UNIT WITH VERTICAL AIR FLOW

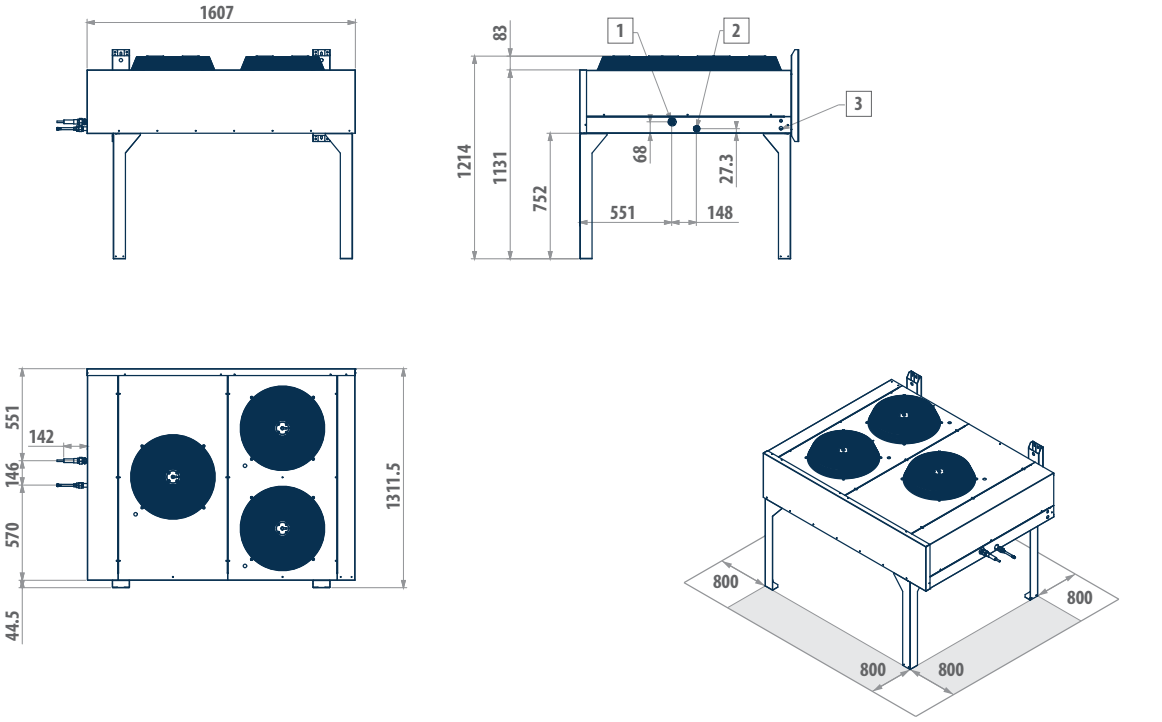

LEGEND

1	Gas line	Rotalock	Ø22
2	Liquid line	Rotalock	Ø16
3	Electrical connection		



Dimensional drawings

HIWARM 033 EXTERNAL UNIT WITH HORIZONTAL AIR FLOW

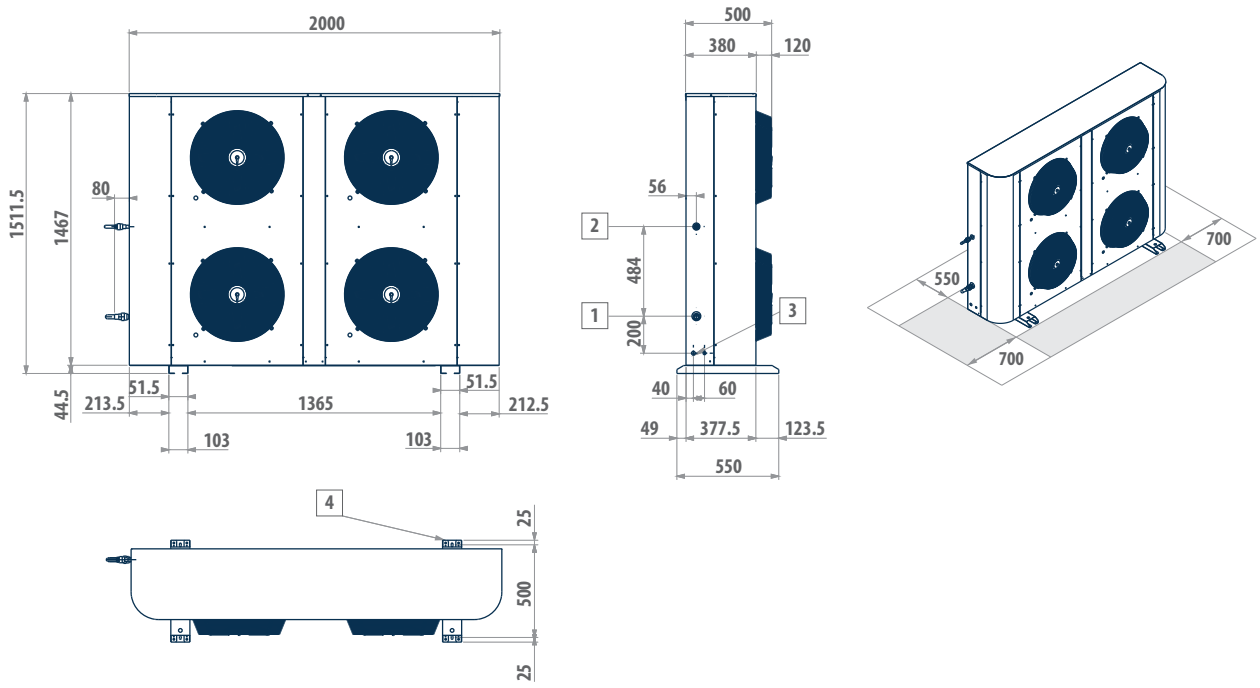

HIWARM 033 EXTERNAL UNIT WITH VERTICAL AIR FLOW

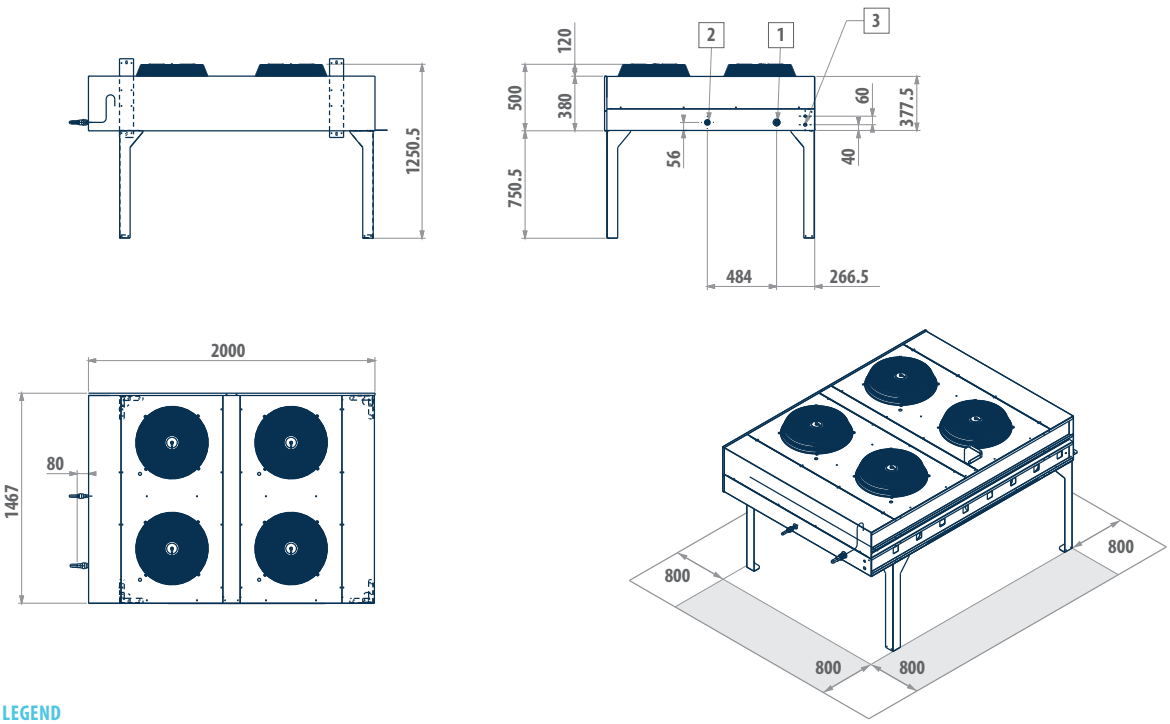

LEGEND

1	Gas line for	Rotalock	Ø22
2	Liquid line	Rotalock	Ø16
3	Electrical connection		

Outdoor packaged air-water unit with BLDC compressor

HIWARM COMPACT 10 - 29 kW





Total heat recovery multi-purpose unit | Multi-purpose unit - 2-pipe system | BLDC scroll compressor | R-410A refrigerant | Cooling / Heating | Axial fans | Packaged unit

PLUS

- Total heat recovery for DHW production
- Twin-rotary or scroll compressor activated by an electronically-controlled BLDC motor.
- Electronically controlled electric expansion valve
- Modulating hydraulic pumps with a stainless steel impeller.
- Access to the tax incentives provided for energy retrofitting

Total recovery and energy efficiency in every condition

The HIWARM COMPACT units have been designed to cool and heat water for air conditioning systems and for the production of DHW for residential or commercial use. They are total heat recovery multi-purpose units with 2 separated circuits, whose operating modes are described below:

- cold water production in summer for the air conditioning system
- cold water production for the air conditioning system with total condensation heat recovery for DHW production
- hot water production for the heating system
- production of DHW during winter or mid-seasons with priority over heating.

Thanks to high-standard performances of the main components used, HIWARM COMPACT operating range is particularly extended and allows a proper and effective response to the need of residential or commercial buildings even with low external temperatures, making the use of additional heat power units unnecessary. Thanks to a reliable engineering and a management software specifically developed by Galletti R&D Dpt, the BLCD variable-speed compressor responds every minute to the system's requests by adjusting the produced power in the most efficient way.
The compact dimensions and the hydronic kit included, not to mention the wide range of options and accessories, guarantee a simple installation without requiring excessive dedicated spaces.

HIWARM COMPACT can represent the only system generator for residential use, single or centralized.
In dual-purpose/bioenergetic systems, it is managed by EVOSYSTEM.

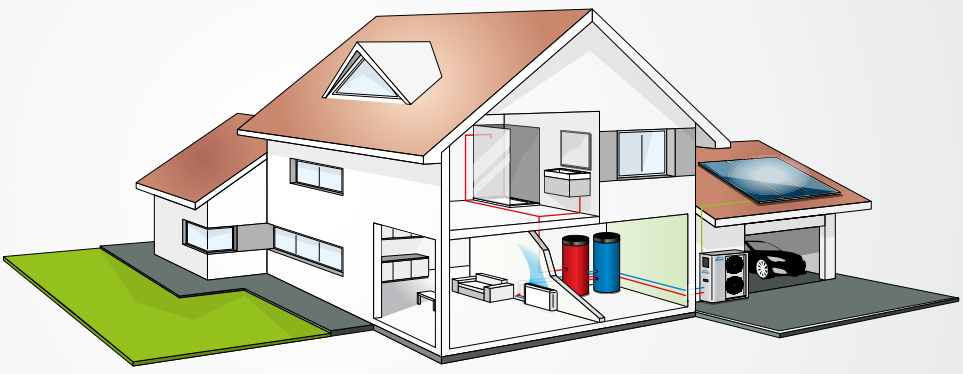



MAIN COMPONENTS

Structure

The cabinet, made of galvanized and painted sheet , has been created to resist to atmospheric agents and allow a comfortable access to the internal components for maintenance.

Microprocessor control

Developed according to the most recent technologies, the microprocessor control allows the complete management of HIWARM COMPACT units through a specifically designed software.



Electronically controlled electric expansion valve

By rapidly adjusting to the variation of workloads and thus integrating the activities carried out by the compressor, it represents one of the key components of the units and it assures the efficiency and stability of its operation.

Heat exchanger

The finned exchanger is made of copper pipes mechanically fixed to aluminium fins: thanks to the accurate design, it guarantees the maximum efficiency in every operating mode and it facilitates defrosting phases.

Compressor

It is housed in a completely closed space and it is further made sound-proof through the use of soundproofing insulation. Hermetic twin-rotary or scroll activated by a BLDC permanent magnet motor is fixed on the base though anti-vibration dampers.

Hydraulic kit

The centrifugal circulators (both system and DHW side) can be of modulating type with a stainless steel impeller which allows the operation with water mixtures and ethylene glycol up to 35%. Moreover, an expansion tank and an automatic loading tap are included.



CONFIGURATION

The models are completely configurable by selecting the version and the options. To the right is shown an example of configuration.

Version	Optional ▶	1	2	3	4	5	6	7	8	9	10	11	12	13
HWMC010HMAA		A	6	S	3	E	E	0	0	0	0	G	0	0

To verify the compatibility of the options, use the selection software or the price list.

AVAILABLE VERSIONS

Total heat recovery multi-purpose unit

HWMC…H0AA Unit with 400V - 3N - 50 Hz power supply
HWMC…HMAA Unit with 230V - 1 - 50 Hz power supply

CONFIGURATION OPTIONS

1 - EXPANSION VALVE
- **A** Electronic 230V

2 - PUMP AND ACCESSORIES
- **0** Absent
- **2** 1 Modulating standard pump, system side
- **3** 1 EC pump, system side
- **5** 2 Modulating pumps (system+DHW side)
- **6** 2 EC pumps (system+DHW side)

3 - INERTIAL BUFFER TANK
- **0** Absent
- **S** Present, system side

4 - AUXILIARY
- **0** Absent
- **1** User tank sensor
- **2** External electric heating element control
- **3** Opt 1 + Opt 2

5 - FANS
- **C** Standard with condensation control
- **E** BLDC with electronic control

6 - ANTIFREEZE KIT
- **E** Base (plate exchangers only)
- **1** Additional protection for 1 pump
- **2** Additional protection for 1 pump and tank
- **3** Additional protection for 2 pumps
- **4** Additional protection for 2 pumps and tank

7 - SOUND INSULATION
- **0** Absent
- **1** Compressor compartment soundproofing
- **2** Compressor silencing housings
- **3** Opt 1 + Opt 2

8 - COOLING ACCESSORIES
- **0** None
- **M** Refrigerant pressure gauges

9 - REMOTE CONTROL
- **0** Absent
- **B** MYCHILLER BASE remote control (option 1 - 3 field 13 disabling)
- **P** MYCHILLER PLUS remote control (option 1 - 3 field 13 disabling)
- **C** Advanced pGD1 remote control

10 -SPECIAL HEAT EXCHANGERS
- **0** Standard
- **R** Copper / copper
- **C** Cataphoresis
- **B** Corrosion-proof
- **I** Hydrophilic

11 - CONDENSER PROTECTIVE GRILLE
- **0** Absent
- **G** Present

12 - ADDITIONAL OPTIONS
- **0** Absent
- **1** Exchanger heating cable

13 - ADDITIONAL CARDS
- **0** Absent
- **1** RS485 (Carel / Modbus)
- **2** Clock card
- **3** LON card

ACCESSORIES

- Base rubber vibration dumpers
- Base spring vibration dumpers

Rated technical data

HIWARM		HWMC 010 HM		HWMC 013 H		HWMC 018 H		HWMC 023 H		HWMC 029 H	
Power supply	V-ph-Hz	230 - 1 - 50		400 - 3N - 50		400 - 3N - 50		400 - 3N - 50		400 - 3N - 50	
Compressor status		min	max	min	max	min	max	min	max	min	max
Cooling mode (1)											
Cooling Capacity	kW	2,90	10,5	5,68	13,7	5,64	18,4	9,04	23,3	9,10	29,4
Total power input	kW	0,90	3,41	1,61	4,45	1,61	7,65	2,54	7,54	2,59	11,7
EER	-	3,22	3,09	3,53	3,09	3,51	2,40	3,56	3,08	3,51	2,52
ESEER	-	4,87	4,87	4,62	4,62	4,44	4,44	4,12	4,12	4,06	4,06
User Water Flow Rate	l/h	499	1822	978	2370	970	3178	1556	4016	1565	5088
User Water Pressure Drops	kPa	<5	21	<5	18	<5	31	<5	24	<5	30
User side water pump available pressure head	kPa	182	127	205	157	205	117	198	147	198	120
Cooling mode +DHW (2)											
Heating Capacity	kW	2,66	10,1	5,30	13,5	5,26	18,8	8,54	23,1	8,60	30,3
Total power input	kW	0,73	3,48	1,51	4,39	1,50	7,35	2,22	7,28	2,26	10,9
Heating capacity DHW	kW	3,30	13,1	6,63	17,4	6,58	25,3	10,5	29,5	10,6	39,9
COP	-	8,12	6,67	7,92	7,04	7,89	6,02	8,59	7,22	8,49	6,45
User Water Flow Rate	l/h	457	1739	912	2330	905	3259	1471	3983	1481	5233
User Water Pressure Drops	kPa	<5	19	<5	18	<5	32	<5	24	<5	32
User side water pump available pressure head	kPa	183	132	206	159	206	112	199	148	199	115
DHW Water Flow Rate	l/h	573	2267	1148	3001	1141	4365	1820	5092	1838	6886
DHW Water Pressure Drops	kPa	<5	28	<5	25	<5	51	6	39	<5	46
DHW side water pump available pressure head	kPa	179	97	199	128	199	45	191	107	193	57
Heating mode or DHW (3)											
Heating Capacity	kW	2,85	11,5	5,81	15,0	5,79	21,7	9,17	25,8	9,31	33,9
Total power input	kW	0,99	3,52	1,74	4,42	1,85	7,68	2,95	8,21	3,07	12,2
COP	-	2,88	3,26	3,35	3,39	3,13	2,82	3,11	3,14	3,04	2,78
User Water Flow Rate	l/h	494	1982	1007	2589	1004	3736	1589	4449	1615	5857
User Water Pressure Drops	kPa	<5	22	<5	19	<5	38	<5	31	<5	34
User side water pump available pressure head	kPa	181	116	203	149	203	89	195	131	197	101
General Data											
Maximum absorbed current	A	27		20		22		29		43	
n° of scroll compressor/ circuits	-	1/1		1/1		1/1		1/1		1/1	
Expansion tank	dm^3	1		1		1		1		1	
Buffer tank	dm^3	30		30		30		50		50	
Sound power level (4)	dB(A)	71		71		71		74		74	
Weight without accessories	kg	220		220		220		300		300	
Weight with pump and tank	kg	240		240		240		347		347	

(1) Water temperature 12/7 °C, outdoor air temperature 35 °C (UNI EN 14511:2011)
(2) Chilled water temperature 12/7 °C, recovery water temperature 40/45 °C
(3) Water temperature 40/45 °C, outdoor air temperature 7 °C D.B. - 6 °C W.B. (UNI EN 14511:2011)
(4) Sound power level measured according to UNI EN ISO 9614



Dimensional drawings

HIWARM COMPACT 10 - 18

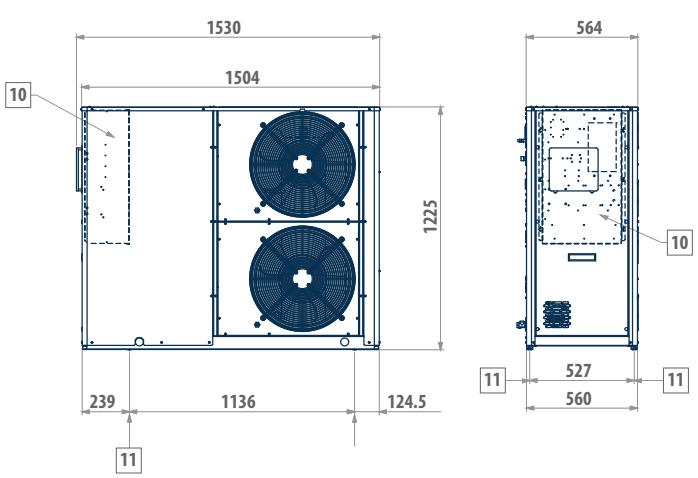

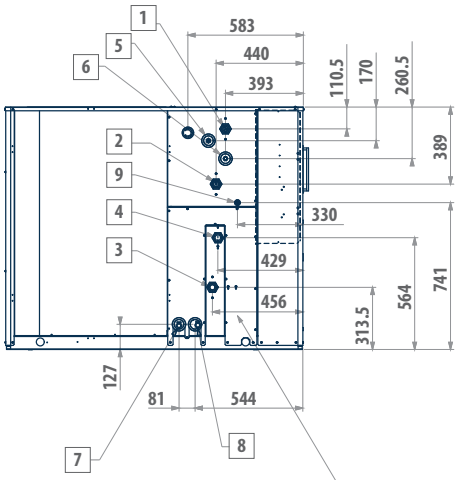

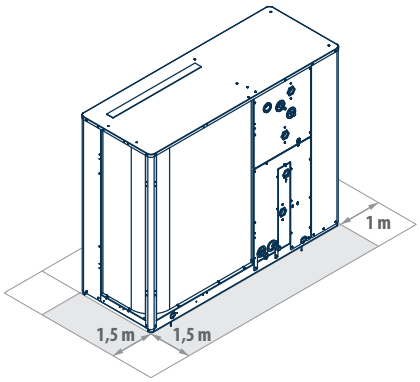

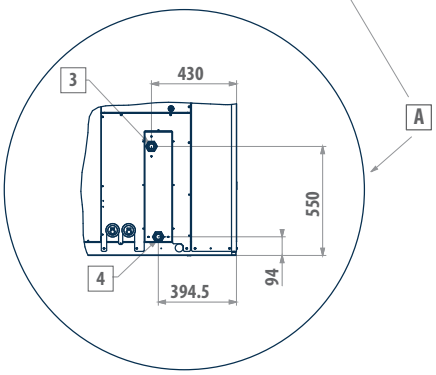

LEGEND

1	Water inlet 1" ¼ female
2	Sanitary hot water inlet 1" ¼ female
3	Water outlet 1" ¼ female
4	Sanitary hot water outlet 1" ¼ female
5	Safety valve discharge outlet provided with rubber ring holder
6	Water supply ½" male (optional tap)
7	Water drainage ½" female
8	Sanitary hot water drainage ½" female
9	Power supply, Ø 28 mm
10	Electric control board
11	Fastening points for vibration dampers
A	Version with EC pump

Dimensional drawings

HIWARM COMPACT 23 - 29

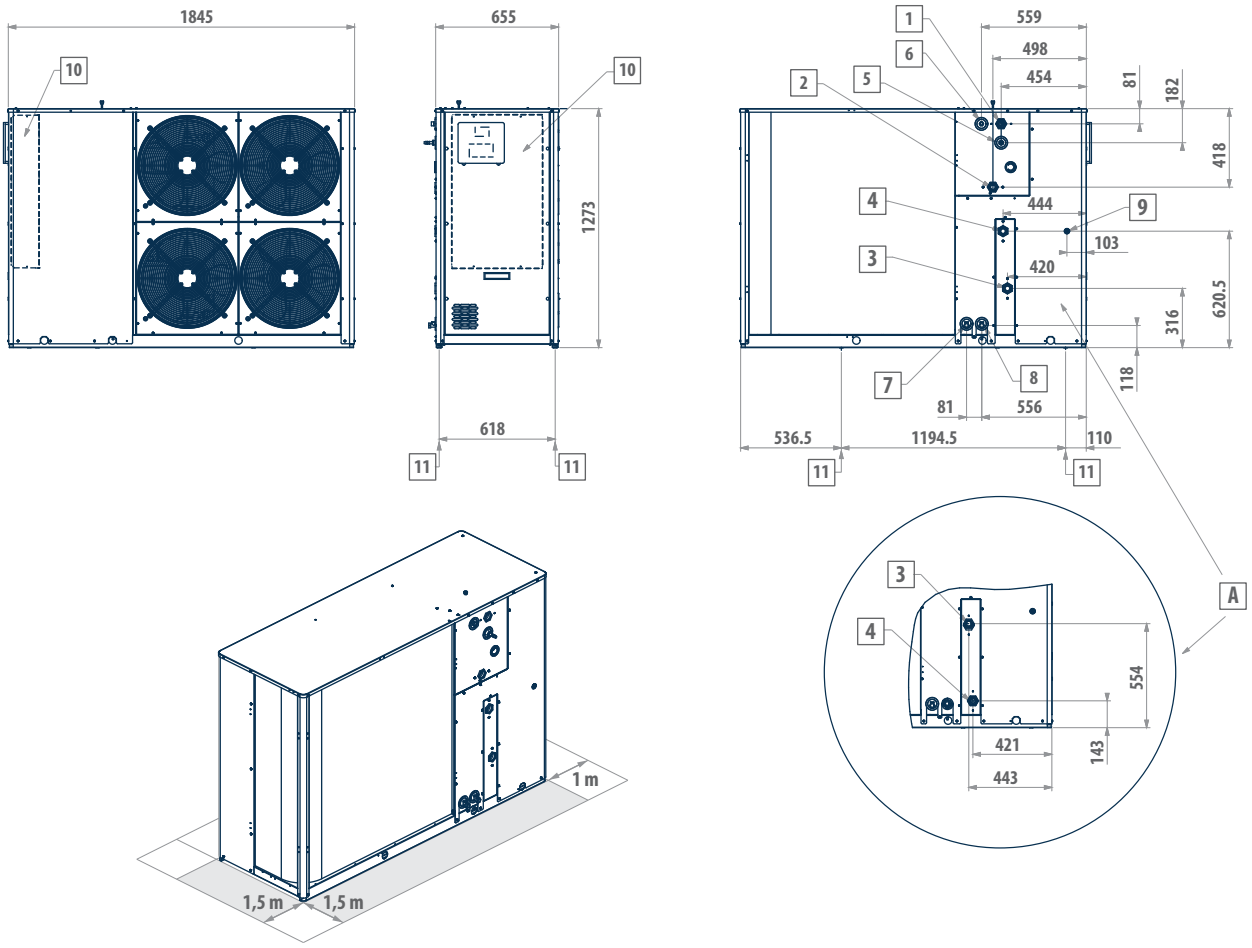

LEGEND

1	Water inlet 1" ¼ female
2	Sanitary hot water inlet 1" ¼ female
3	Water outlet 1" ¼ female
4	Sanitary hot water outlet 1" ¼ female
5	Safety valve discharge outlet provided with rubber ring holder
6	Water supply ½" male (optional tap)
7	Water drainage ½" female
8	Sanitary hot water drainage ½" female
9	Power supply, Ø 28 mm
10	Electric control board
11	Fastening points for vibration dampers
A	Version with EC pump



Outdoor packaged air-water unit

MCP 7 - 41 kW





Total heat recovery multi-purpo-se unit | Multi-pur-pose unit - 2-pipe system | Scroll compressor | R-407 C refrigerant | Cooling / Heating | Axial fans | Packaged unit

PLUS

- Total heat recovery for DHW production
- High-reliability scroll compressors.
- Electronically controlled electric expansion valve
- Hydraulic pumps with stainless steel impeller for system and DHW
- Access to the tax incentives provided for energy retrofitting

The complete and efficient solution for DHW and air conditioning.

As well as winter heating and summer air conditioning, the multi-purpose units of the MCP units are total recovery heat pumps designed to be used in residential or service sector in two-pipe air-conditioning systems in which thermal power for the production of DHW is required.
Thanks to the advanced technology which characterizes it, not only MCP is capable of satisfying this request in every season (even when there are not air-conditioning needs) but it also does this in the most efficient and economic way by using the total recovery of condensation heat available during the cooling phase.
MCP units are equipped with scroll compressors and, depending on size and version, they are available for single-phase and three-phase supply. The energetic efficiency at partial load is assured by the availability of versions equipped with two compressors connected in parallel that offer a remarkable decrease of the absorbed electrical power when the load to meet is much lower than the maximum one thus allowing to maximize the seasonal efficiency of the system. Being available also in single-phase, combined executions are also effectively usable when high-power is requested without electrical three-phase availability.
The high quality of the components and the care in the sizing of heat exchangers are combined with a highly-developed management software, creating an extremely wide operating range that allows to conceive MCP as a single generator for a continuous use in every season.

The multi-purpose systems of the MCP Galletti series can be easily integrated in photovoltaic systems for electrical energy production thus representing a single generator for all the need of air-conditioning, heating and DHW .

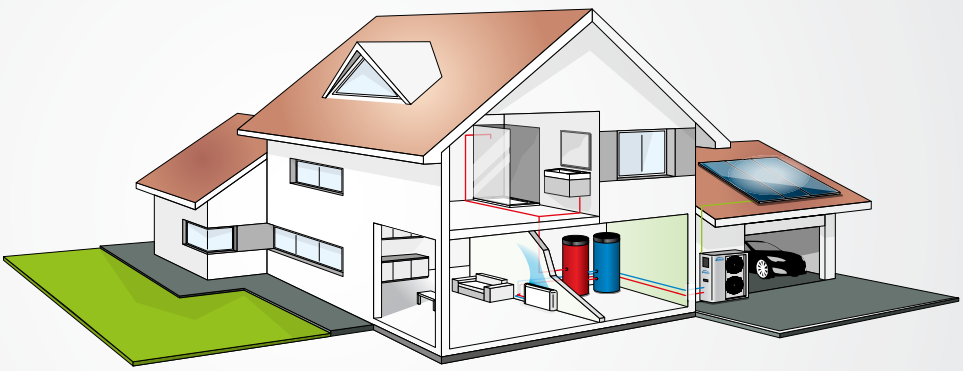



MAIN COMPONENTS

Structure

In galvanized and painted sheet, resistant to corrosive agents. Compressor compartment accessible from three sides thanks to easily removable panels also available with soundproofing inner insulation.

Hydraulic kit

Available for both circuits, it is composed of centrifugal circulators with stainless steel impeller that allows its use with water and ethylene glycol mixtures up to 35%. Expansion tank and filling tap are included.

Heat exchanger

Finned battery made of copper pipes mechanically secured to aluminium fins, carefully designed to minimize defrosting phases and optimize the efficiency of heat exchange in every operating mode.



Compressor

Hermetic scroll compressor operated by asynchronous motor and characterized by a wide operating range. It is secured to the base through rubber supports in order to reduce vibration transmission.



Electronic expansion valve

Born from the most recent technologies, it represents one of the key elements for the proper operation of the unit. It is managed by a PID algorithm to adapt quickly and precisely to every working condition and keep the refrigeration cycle steady.

Microprocessor control

It allows the complete management of MCP units in order to face requests coming from the system. It can also activate an electric heating element to be used in case of programmable anti-legionella cycles or as a backup in case of forced machine down time.

CONFIGURATION

The models are completely configurable by selecting the version and the options. To the right is shown an example of configuration.

Version	Fields	1	2	3	4	5	6	7	8	9	10	11	12	13
MCP010HMAA		A	4	S	3	C	E	0	0	B	0	G	0	2

To verify the compatibility of the options, use the selection software or the price list.

AVAILABLE VERSIONS

Total heat recovery multi-purpose unit

MCP..H0AA Unit with 400V - 3N - 50 Hz power supply
MCP..H1AA Unit with 230V - 3 - 50 Hz power supply
MCP..HMAA Unit with 230V - 1 - 50 Hz power supply
MCP..H2AA Unit with circuit breakers and 400V - 3N - 50 Hz power supply
MCP..H3AA Unit with circuit breakers and 230V - 3 - 50 Hz power supply
MCP..H4AA Unit with circuit breakers and 230V - 1 - 50 Hz power supply

CONFIGURATION OPTIONS

1 - EXPANSION VALVE
- A Electronic 230V

2 - PUMP AND ACCESSORIES
- 0 Absent
- 1 1 ON/OFF pump, system side
- 2 1 Modulating pump, system side
- 3 1 EC pump, system side
- 4 1 ON/OFF pump, system side + 1 ON/OFF pump, DHW side
- 5 1 modulating pump, system side + 1 modulating pump, DHW side
- 6 1 EC pump, system side + 1 EC pump, DHW side

3 - INERTIAL BUFFER TANK
- 0 Absent
- S Present, system side

4 - AUXILIARY CONTACTS
- 0 Absent
- 1 Compressor status
- 2 Reduction steps enabling
- 3 External electric heating element control
- 4 Opt 1 + Opt 2

5 - FANS
- C Standard with phase trimming condensation control
- E BLDC with electronic control

6 - ANTIFREEZE KIT
- E Base (plate exchangers only)
- 1 Additional protection for 1 pump
- 2 Additional protection for 1 pump and tank
- 3 Additional protection for 2 pumps
- 4 Additional protection for 2 pumps and tank

7 - SOUND INSULATION
- 0 Absent
- 1 Compressor compartment soundproofing
- 2 Compressor silencing housings
- 3 Opt 1 + Opt 2

8 - COOLING ACCESSORIES
- 0 None
- M Refrigerant pressure gauges

9 - REMOTE CONTROL
- 0 Absent
- B MYCHILLER BASE remote controller (RS485 is a mandatory accessory)
- P MYCHILLER PLUS remote controller (option 1 - 3 field 13 disabling)
- C ADVANCED pGD1 remote controller

10 -SPECIAL HEAT EXCHANGERS
- 0 Standard
- R Copper / copper
- C Cataphoresis
- B Fins pre-coated with epoxy paint
- I Hydrophilic

11 - HEAT EXCHANGER PROTECTIVE GRILLE
- 0 Absent
- G Present

12 - COMPRESSOR OPTIONS
- 0 Absent
- 1 Power factor correction capacitors
- 2 Soft starter
- 3 Power factor correction capacitors + soft starter

13 - ADDITIONAL CARDS
- 0 Absent
- 1 RS485 (Carel / Modbus)
- 2 Clock card
- 3 LON card

ACCESSORIES

- -Base rubber vibration dumpers
- -Kit of spring vibration dampers
- -MCP MYCHILLER BASE (RS485 is a mandatory accessory)
- -MCP MYCHILLER PLUS (RS485 is a mandatory accessory)

Rated technical data

MCP		007M	007	009M	009	010M
Power supply	V-ph-Hz	230-1-50	400-3N-50	230-1-50	400-3N-50	230-1-50
Cooling mode (1)						
Cooling Capacity	kW	7,54	7,54	9,51	9,61	11,0
Total power input	kW	2,44	2,35	3,07	2,96	3,55
EER		3,09	3,21	3,10	3,24	3,10
ESEER		3,54	3,68	3,54	3,73	3,61
User Water Flow Rate	l/h	1305	1306	1648	1664	1906
User Water Pressure Drops	kPa	24	24	30	30	23
User side water pump available pressure head	kPa	144	142	124	122	123
Cooling mode +DHW (2)						
Heating Capacity	kW	7,19	6,41	9,00	9,04	10,5
Total power input	kW	2,60	2,48	3,23	3,18	3,78
Heating capacity DHW	kW	9,66	8,76	12,1	12,1	14,1
COP		6,49	6,13	6,52	6,63	6,50
User Water Flow Rate	l/h	1244	1108	1558	1565	1811
User Water Pressure Drops	kPa	22	18	27	27	21
User side water pump available pressure head	kPa	33	28	40	40	32
DHW Water Flow Rate	l/h	1664	1510	2079	2078	2427
DHW Water Pressure Drops	kPa	148	154	130	129	129
DHW side water pump available pressure head	kPa	122	130	93	93	88
Heating mode or DHW (3)						
Heating Capacity	kW	8,96	8,86	11,2	11,3	12,7
Total power input	kW	2,67	2,57	3,49	3,28	3,86
COP		3,35	3,45	3,22	3,43	3,28
User Water Flow Rate	l/h	1543	1526	1938	1935	2211
User Water Pressure Drops	kPa	29	29	36	36	26
User side water pump available pressure head	kPa	134	138	111	111	107
General Data						
Maximum absorbed current	A	15	5	20	7	22
LRA Inrush current	A	76	32	97	46	108
LRA Inrush current with softstarter	A	44	16	59	20	66
n° of scroll compressor/ circuits		1/1	1/1	1/1	1/1	1/1
Expansion tank	dm^3	5	5	5	5	5
Buffer tank	dm^3	30	30	30	30	30
Sound power level (4)	dB(A)	72	72	75	75	75
Weight without accessories	kg	228	228	265	265	256
Weight with pump and tank	kg	245	245	282	282	272

(1) Water temperature 12/7 °C, outdoor air temperature 35 °C (UNI EN 14511:2011)
(2) Chilled water temperature 12/7 °C, recovery water temperature 40/45 °C
(3) Water temperature 40/45 °C, outdoor air temperature 7 °C D.B. - 6 °C W.B. (UNI EN 14511:2011)
(4) Sound power level measured according to UNI EN ISO 9614



Rated technical data

MCP		010	013M	013	015	018
Power supply	V-ph-Hz	400-3N-50	230-1-50	400-3N-50	400-3N-50	400-3N-50
Cooling mode (1)						
Cooling Capacity	kW	11,2	13,3	13,5	15,7	19,4
Total power input	kW	3,45	4,29	4,18	5,10	6,8
EER		3,25	3,10	3,23	3,08	2,86
ESEER		3,77	3,61	3,71	3,59	3,15
User Water Flow Rate	l/h	1940	2301	2337	2715	3364
User Water Pressure Drops	kPa	24	32	33	33	49
User side water pump available pressure head	kPa	121	145	144	130	131
Cooling mode +DHW (2)						
Heating Capacity	kW	10,7	12,6	12,8	15,4	18,6
Total power input	kW	3,62	4,62	4,48	5,30	7,0
Heating capacity DHW	kW	14,1	17,0	17,1	20,4	25,3
COP		6,85	6,41	6,69	6,76	6,23
User Water Flow Rate	l/h	1848	2179	2221	2662	3218
User Water Pressure Drops	kPa	22	29	30	32	45
User side water pump available pressure head	kPa	32	45	46	55	72
DHW Water Flow Rate	l/h	2437	2924	2943	3515	4341
DHW Water Pressure Drops	kPa	127	152	150	133	137
DHW side water pump available pressure head	kPa	86	111	111	78	92
Heating mode or DHW (3)						
Heating Capacity	kW	12,8	15,7	15,8	18,2	23,5
Total power input	kW	3,77	4,72	4,62	5,35	7,23
COP		3,40	3,33	3,43	3,40	3,26
User Water Flow Rate	l/h	2187	2707	2726	3133	4047
User Water Pressure Drops	kPa	27	39	40	45	63
User side water pump available pressure head	kPa	107	127	128	106	112
General Data						
Maximum absorbed current	A	8	27	9	12	15
LRA Inrush current	A	52	150	64	74	99
LRA Inrush current with softstarter	A	23	82	28	34	45
n° of scroll compressor/ circuits		1/1	1/1	1/1	1/1	1/1
Expansion tank	dm^3	5	5	5	5	5
Buffer tank	dm^3	30	30	30	30	50
Sound power level (4)	dB(A)	75	75	75	75	78
Weight without accessories	kg	256	265	265	270	393
Weight with pump and tank	kg	272	282	282	287	427

(1) Water temperature 12/7 °C, outdoor air temperature 35 °C (UNI EN 14511:2011)
(2) Chilled water temperature 12/7 °C, recovery water temperature 40/45 °C
(3) Water temperature 40/45 °C, outdoor air temperature 7 °C D.B. - 6 °C W.B. (UNI EN 14511:2011)
(4) Sound power level measured according to UNI EN ISO 9614

Rated technical data

MCP		027	032	040	T18M	T18
Power supply	V-ph-Hz	400-3N-50	400-3N-50	400-3N-50	230-1-50	400-3N-50
Cooling mode (1)						
Cooling Capacity	kW	27,2	34,2	40,1	18,4	18,6
Total power input	kW	9,36	11,40	14,20	6,21	5,97
EER		2,91	3,01	2,82	2,97	3,12
ESEER		3,25	3,46	3,23	3,44	3,62
User Water Flow Rate	l/h	4712	5909	6942	3194	3227
User Water Pressure Drops	kPa	38	38	43	45	45
User side water pump available pressure head	kPa	122	143	128	137	135
Cooling mode +DHW (2)						
Heating Capacity	kW	27,1	32,7	39,4	17,3	17,3
Total power input	kW	9,35	11,30	14,30	6,48	6,55
Heating capacity DHW	kW	36,0	43,5	53,0	23,5	23,6
COP		6,75	6,71	6,45	6,30	6,24
User Water Flow Rate	l/h	4690	5646	6806	3001	3004
User Water Pressure Drops	kPa	37	35	42	40	63
User side water pump available pressure head	kPa	56	53	69	63	40
DHW Water Flow Rate	l/h	6207	7495	9131	4052	4043
DHW Water Pressure Drops	kPa	123	149	131	145	144
DHW side water pump available pressure head	kPa	72	113	80	103	103
Heating mode or DHW (3)						
Heating Capacity	kW	31,7	40,3	47,9	22,5	22,3
Total power input	kW	9,33	12,00	14,60	7,06	6,83
COP		3,39	3,35	3,28	3,19	3,27
User Water Flow Rate	l/h	5461	6952	8253	3871	3839
User Water Pressure Drops	kPa	45	47	57	58	57
User side water pump available pressure head	kPa	105	129	105	121	121
General Data						
Maximum absorbed current	A	19	23	29	39	13
LRA Inrush current	A	127	167	198	117	53
LRA Inrush current with softstarter	A	57	68	86	78	26
n° of scroll compressor/ circuits		1/1	1/1	1/1	2/1	2/1
Expansion tank	dm^3	5	5	5	5	5
Buffer tank	dm^3	50	125	125	50	50
Sound power level (4)	dB(A)	78	78	78	78	78
Weight without accessories	kg	398	525	528	395	395
Weight with pump and tank	kg	435	632	635	428	428

(1) Water temperature 12/7 °C, outdoor air temperature 35 °C (UNI EN 14511:2011)
(2) Chilled water temperature 12/7 °C, recovery water temperature 40/45 °C
(3) Water temperature 40/45 °C, outdoor air temperature 7 °C D.B. - 6 °C W.B. (UNI EN 14511:2011)
(4) Sound power level measured according to UNI EN ISO 9614



Rated technical data

MCP		T22M	T22	T24M	T24	T30
Power supply	V-ph-Hz	230-1-50	400-3N-50	230-1-50	400-3N-50	400-3N-50
Cooling mode (1)						
Cooling Capacity	kW	21,2	21,4	25,8	26,3	31,9
Total power input	kW	7,20	6,98	9,19	8,67	10,5
EER		2,95	3,07	2,81	3,03	3,05
ESEER		3,49	3,61	3,30	3,50	3,68
User Water Flow Rate	l/h	3677	3708	4469	4540	5520
User Water Pressure Drops	kPa	41	41	34	35	33
User side water pump available pressure head	kPa	135	133	130	129	109
Cooling mode +DHW (2)						
Heating Capacity	kW	20,6	20,3	25,6	25,2	30,4
Total power input	kW	7,25	7,54	8,86	9,40	10,9
Heating capacity DHW	kW	27,5	27,5	34,0	34,1	40,8
COP		6,63	6,33	6,73	6,31	6,53
User Water Flow Rate	l/h	3513	3559	4352	4426	5255
User Water Pressure Drops	kPa	59	59	51	50	47
User side water pump available pressure head	kPa	38	38	32	33	31
DHW Water Flow Rate	l/h	4729	4727	5883	5867	7038
DHW Water Pressure Drops	kPa	140	138	134	132	117
DHW side water pump available pressure head	kPa	97	95	85	84	59
Heating mode or DHW (3)						
Heating Capacity	kW	25,5	30,6	25,3	30,4	37,7
Total power input	kW	7,83	9,20	8,06	9,46	11,2
COP		3,25	3,33	3,13	3,22	3,37
User Water Flow Rate	l/h	4351	4385	5250	5283	6511
User Water Pressure Drops	kPa	50	51	41	42	41
User side water pump available pressure head	kPa	118	118	109	109	82
General Data						
Maximum absorbed current	A	15	18	44	54	23
LRA Inrush current	A	59	73	130	177	86
LRA Inrush current with softstarter	A	30	37	88	109	46
n° of scroll compressor/ circuits		2/1	2/1	2/1	2/1	2/1
Expansion tank	dm^3	5	5	5	5	5
Buffer tank	dm^3	50	50	50	50	125
Sound power level (4)	dB(A)	78	78	78	78	78
Weight without accessories	kg	389	389	394	394	525
Weight with pump and tank	kg	415	415	420	420	632

(1) Water temperature 12/7 °C, outdoor air temperature 35 °C (UNI EN 14511:2011)
(2) Chilled water temperature 12/7 °C, recovery water temperature 40/45 °C
(3) Water temperature 40/45 °C, outdoor air temperature 7 °C D.B. - 6 °C W.B. (UNI EN 14511:2011)
(4) Sound power level measured according to UNI EN ISO 9614

Dimensional drawings

MCP 07 - 15

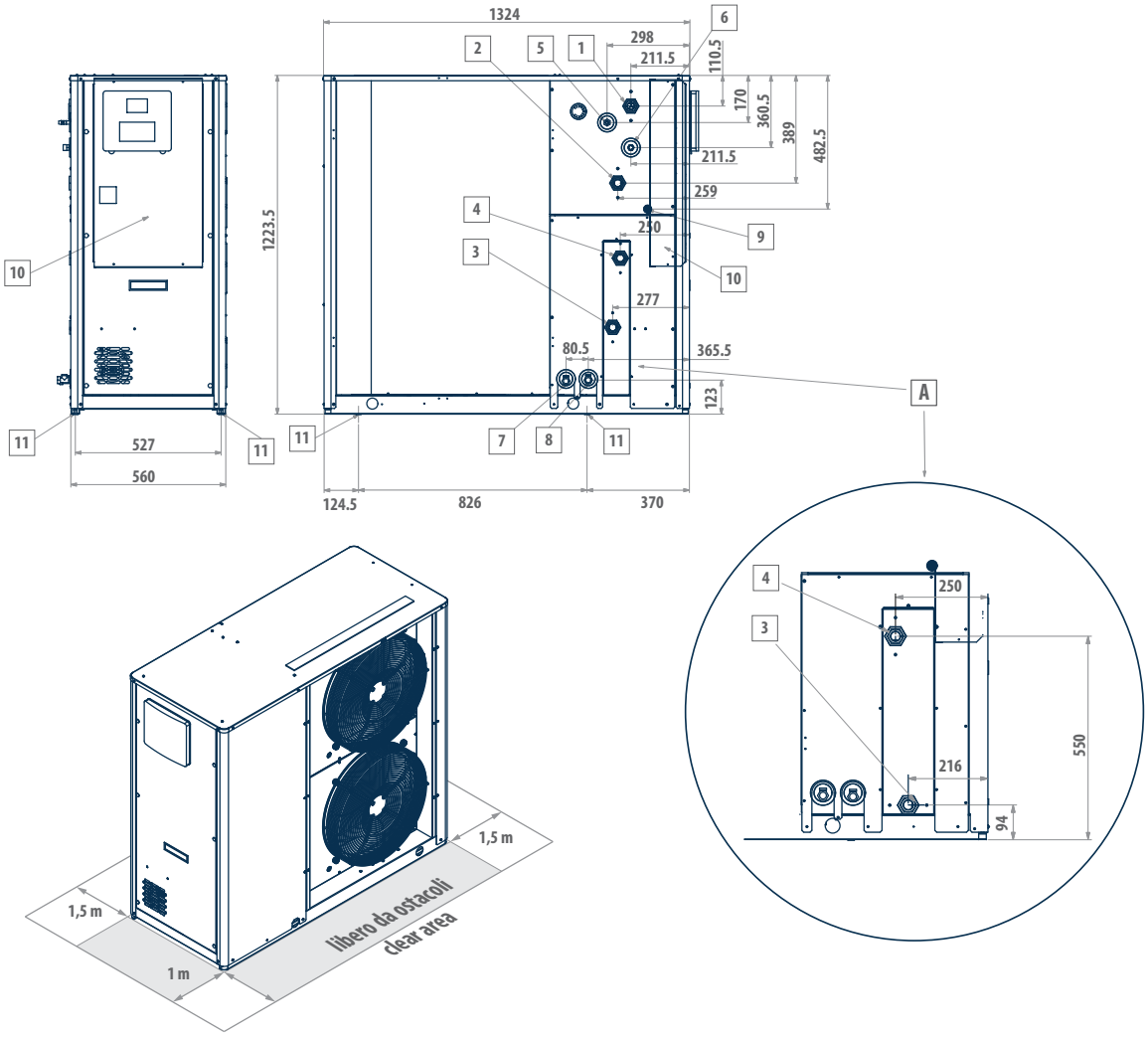

LEGEND

1	Water inlet 1" ¼ female
2	Domestic hot water inlet 1" ¼ female
3	Water outlet 1" ¼ female
4	Domestic hot water outlet 1" ¼ female
5	Safety valve discharge outlet provided with rubber ring holder
6	Water supply ½" male (optional tap)
7	Water drainage ½" female
8	Domestic hot water drainage ½" female
9	Power supply, Ø 28 mm
10	Electric control board
11	Fastening points for vibration dampers
A	Version with EC pump



Dimensional drawings

MCP 18 - 27

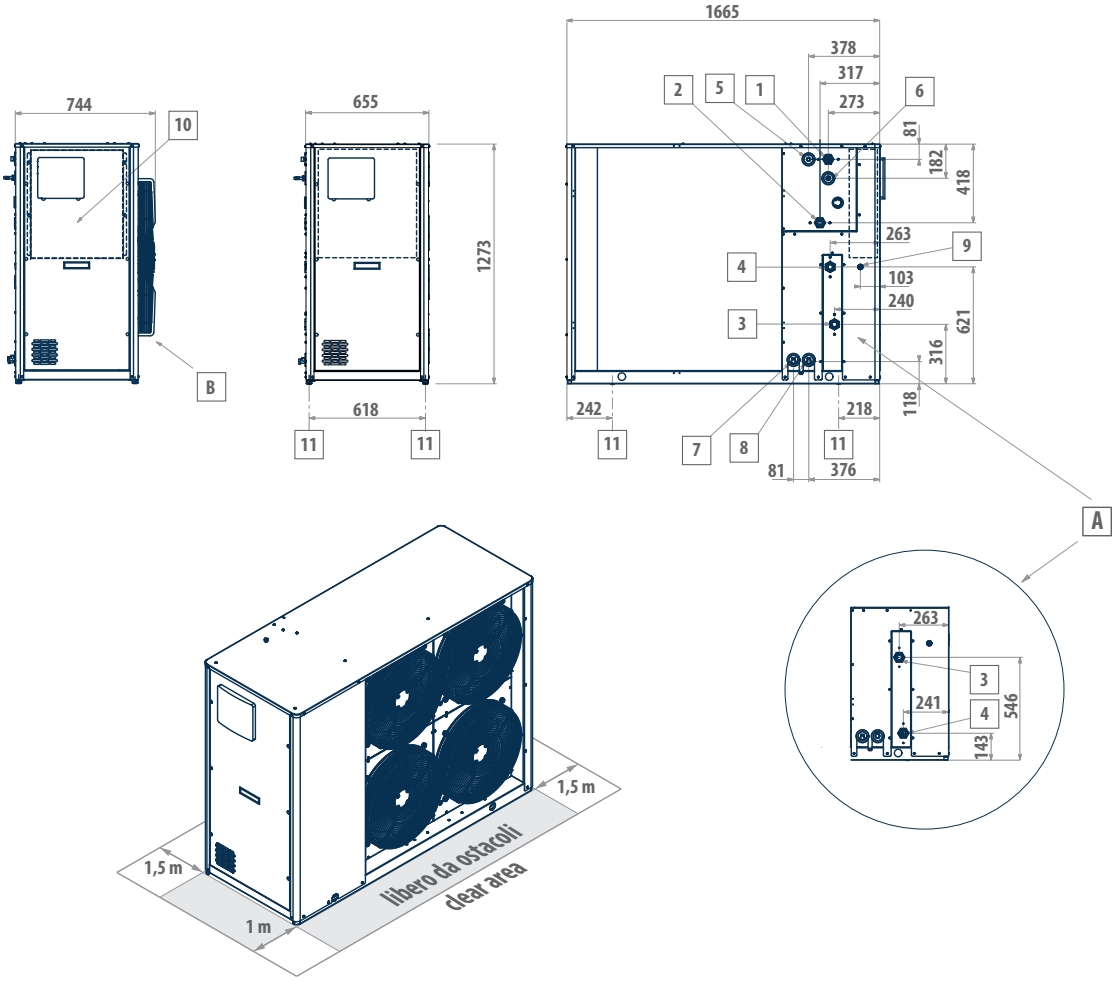

LEGEND

1	Water inlet 1" ¼ female
2	Domestic hot water inlet 1" ¼ female
3	Water outlet 1" ¼ female
4	Domestic hot water outlet 1" ¼ female
5	Safety valve discharge outlet provided with rubber ring holder
6	Water supply ½" male (optional tap)
7	Water drainage ½" female
8	Domestic hot water drainage ½" female
9	Power supply, Ø 28 mm
10	Electric control board
11	Fastening points for vibration dampers
A	Version with EC pump
B	EC fan view.

Dimensional drawings

MCP 18T - 24T

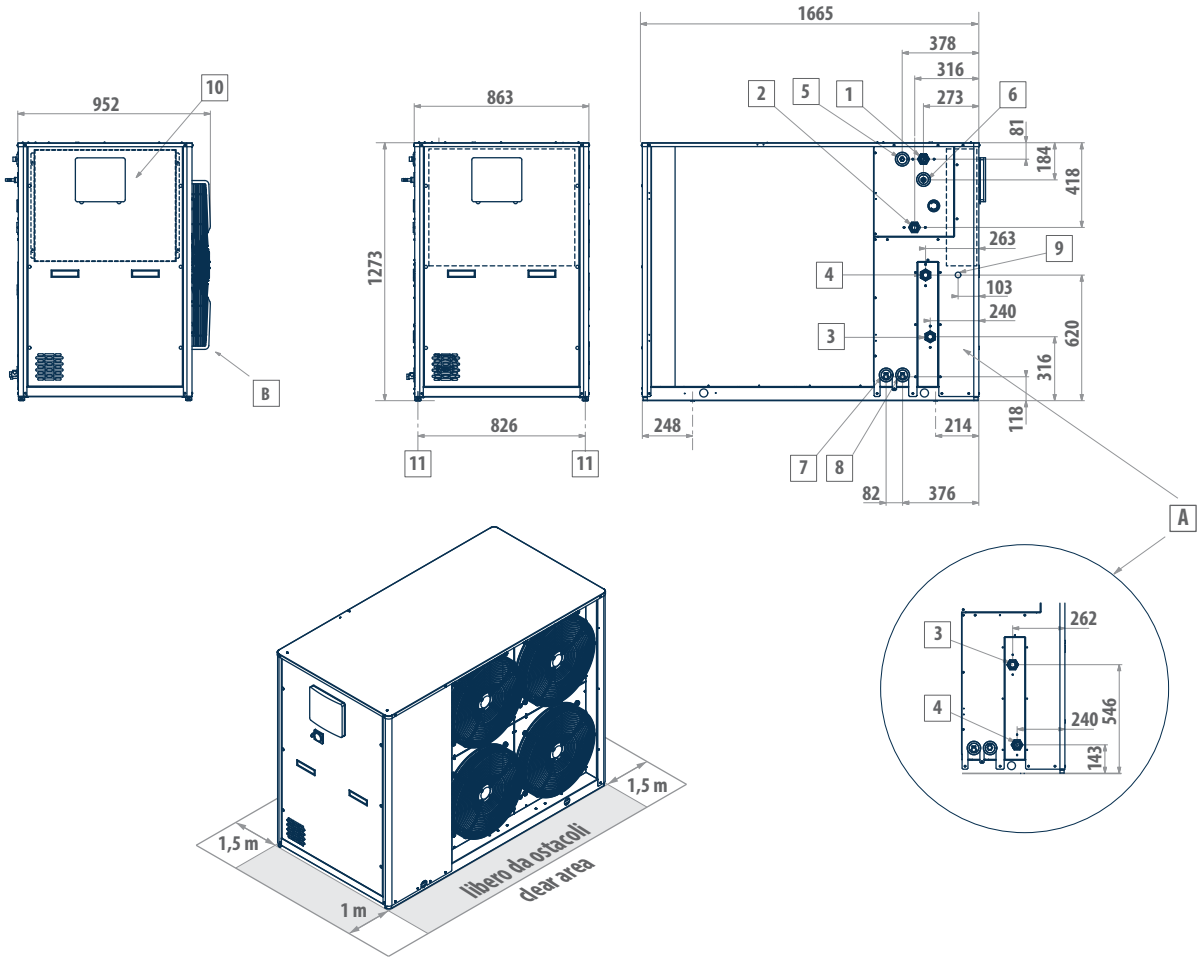

LEGEND

1	Water inlet 1" ¼ female
2	Domestic hot water inlet 1" ¼ female
3	Water outlet 1" ¼ female
4	Domestic hot water outlet 1" ¼ female
5	Safety valve discharge outlet provided with rubber ring holder
6	Water supply ½" male (optional tap)
7	Water drainage ½" female
8	Domestic hot water drainage ½" female
9	Power supply, Ø 28 mm
10	Electric control board
11	Fastening points for vibration dampers
A	Version with EC pump
B	EC fan view



Dimensional drawings

MCP 32 - 40 - 30T

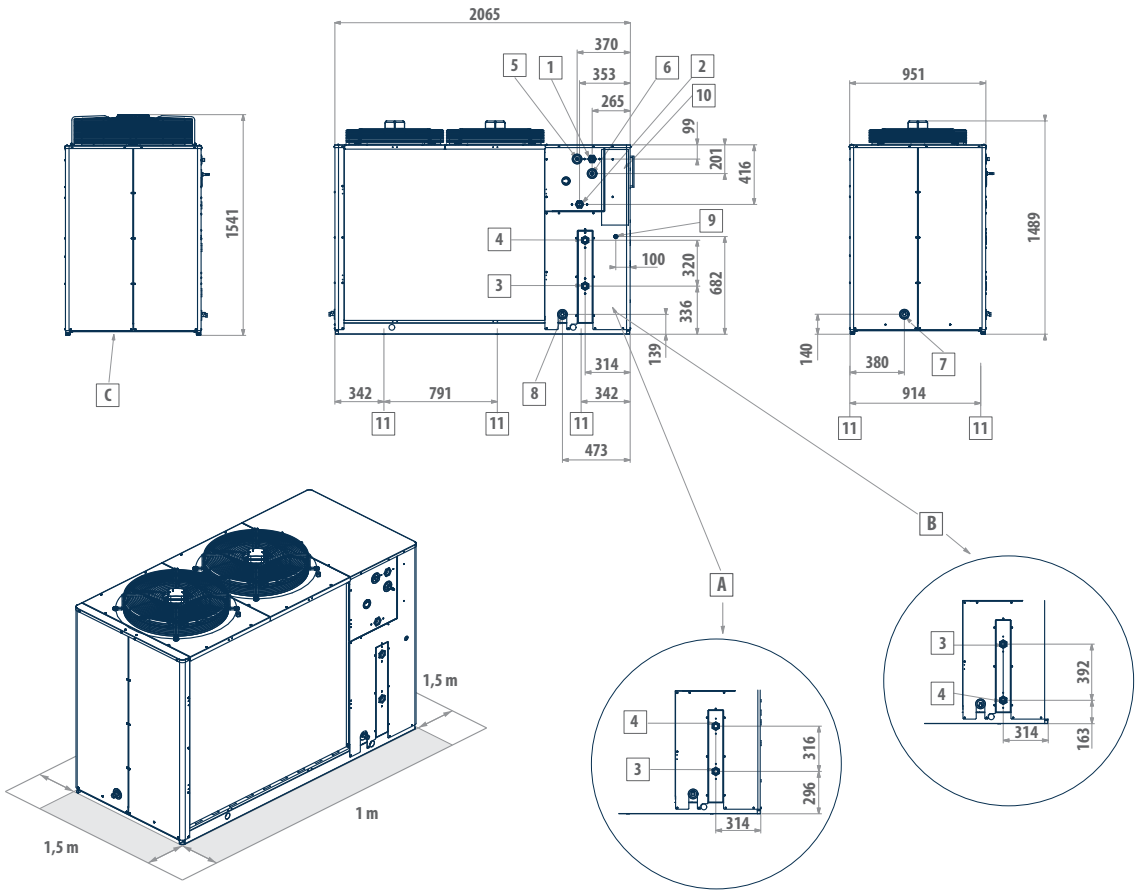

LEGEND

1	Water inlet 1" ¼ female
2	Domestic hot water inlet 1" ¼ female
3	Water outlet 1" ¼ female
4	Domestic hot water outlet 1" ¼ female
5	Safety valve discharge outlet provided with rubber ring holder
6	Water supply ½" male (optional tap)
7	Water drainage ½" female
8	Domestic hot water drainage ½" female
9	Power supply, Ø 28 mm
10	Electric control board
11	Fastening points for vibration dampers
A	Version with EC pump, models 32 - 40
B	Version with EC pump, model T30
C	EC fan view

Outdoor packaged air-water unit

LCP 52 - 314 kW





Total heat recovery multi-purpose unit | Multi-purpose unit - 2-pipe system | Multi-purpose unit - 4-pipe system | Scroll compressor | R-410A refrigerant | Cooling / Heating | Packaged unit

PLUS

- Total heat recovery in two-pipe and four-pipe systems.
- High efficiency under part load conditions
- Production of chilled water up to an air temperature of 51 °C
- Smart Defrost System always able to guarantee continuity in operation.
- Built-in hydronic unit
- Access to the tax incentives provided for energy retrofitting

Heating, cooling, domestic hot water = one single system to meet all kinds of needs.

LCP multi-purpose units are air conditioning and domestic hot water (DHW) production units conceived for both residential and industrial use and designed to operate 24 hours a day. They cover a wide range of heating capacities, from 52 to 314 kW, guaranteeing a high thermodynamic efficiency and broad configurability, both in terms of accessories and cooling circuits.
All units of the LCP series, regardless of size, can be also made in a low-noise configuration "L", in which the compressors and compressor compartment are covered with sound-deadening material and the unit is specially dimensioned so as to be compatible with a reduced fan speed.
As for units with refrigerating capacity lower than 100 kW, LCP presents a solution with a double compressor divided into two independent thermodynamic circuits to always assure the unit operation.
As for units with cooling power higher than 100 kW, 4 compressors divided in two thermodynamic circuits are available in order to supply the unit power in four steps, perfectly adjusting it to the actual heat load of the system and to reduce inrush current.
LCP units can be coupled with both 2- and 4-pipe systems, the letter "P" indicates heat pump for 4-pipe systems and the letter "M" indicates multifunctional heat pump for 2-pipe systems.
In both versions, the machine uses the total heat recovery, when a request for contemporary production of cold water (cooling) and hot water (heating/DHW production) is needed.
The unit recovers the condensation heat of the cooling system that would otherwise be ejected into the atmosphere.

The total recovery LCP heat pumps have been designed for the cooling and the heating of the water destined to air-conditioning and domestic systems in residential, commercial or industrial buildings.

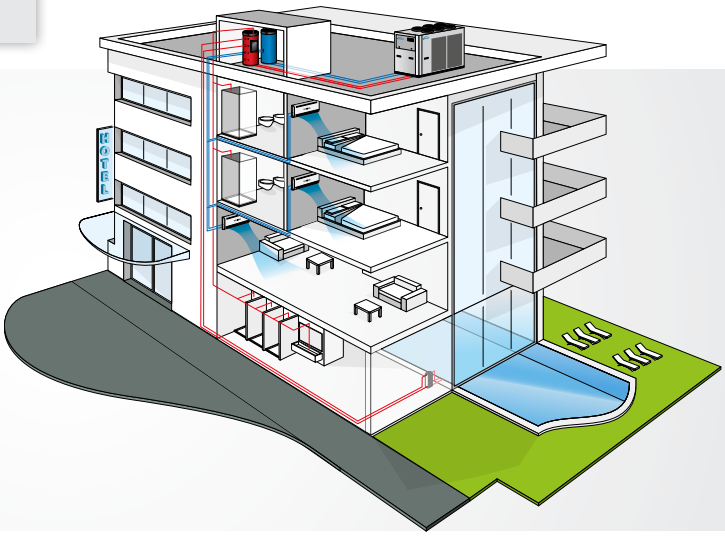



MAIN COMPONENTS

Refrigerating circuits

Thanks to the presence of two independent thermodynamic circuits, the LCP M is capable of producing hot water for heating while simultaneously carrying out a defrost cycle or guaranteeing the replenishment of domestic hot water.

Heat exchanger



Hydrophilic finned block heat exchangers are installed; these break down the drops of water into particles and reduce the obstruction of the space between one fin and another caused by ice build-up. Thanks to a lower surface tension, the water tends to slide and precipitate by gravity, preventing the formation of frost at low temperatures.

Fans

4/6/8-pole axial-type fans with airfoil-shaped blades made of hybrid plastic/aluminium material, statically and dynamically balanced in two planes, fitted with a protective grille and mounted with rubber vibration dampers placed in between.
Option to select the condensation pressure-switch control with variation of the air-flow rate through electronic switching operated fans, to operate in cooling mode at low temperatures (up to -15°C)

Compressors

The scroll compressor today represents the best solution in terms of reliability and efficiency in the range of capacities up to 200 kW per circuit and the best solution in terms of sound power emitted. The use of scroll compressors makes it possible to use low-viscosity oils which, compared to solutions with oil at a high viscosity level, reduce thermal resistance at the evaporator with increases in the evaporation temperature of over 1.5°C (more than a 5.5% gain in terms of EER) compared to alternative solutions.



Electronic microprocessor controller

LCP units are supplied with an Advanced microprocessor controller. In addition to the functions described below, this microprocessor offers the option of custom software features to ensure optimal satisfaction of all system requirements, including control of the unit with step-control or cascade logic.
As regards remote communication options, the controls are configured for a connection to advanced BMS systems.

AVAILABLE VERSIONS

LCP M - 2-pipe systems

Cooling



Heating



DHW production



Cooling + DHW



Operating modes available for an LCP M unit which interfaces with a 2-pipe system.
C1 Hydraulic circuit manages winter heating and summer air-conditioning while the C2 one is used for the production of DHW, ensuring this function 365 days per year.
In case of simultaneous production of cold (C1) and high-temperature water for domestic use (C2), the machine is able to recover all the condensation heat on the refrigerant for the production of DHW.

LCP P - 4-pipe systems

Cooling



Heating



Cooling + Heating



Operating modes available for an LCP P unit which interfaces with a 4-pipe air conditioning system.
In this kind of systems, it is possible to request air-conditioning and heating at the same time. For this reason, C1 and C2 hydraulic circuits respectively produce cold and hot water.
In case of simultaneous operation of C1 and C2 hydraulic circuits, the condensation heat of the cooling system is totally recovered for the production of hot water.

Operating modes of the LCP M version



Cooling

In the "Chiller" mode the LCP M multifunctional unit chills water to cool a room on the user side, dissipating the condensation heat in air by means of a finned block condenser.



Heating

In the "Heat Pump" mode the LCP M unit heats the water in the condenser to provide heating on the user side, absorbing the evaporative cooling capacity in air by means of a finned block heat exchanger.



Hot water production (for sanitary use-DHW)

In the "Production of High-temperature Hot Water for sanitary use (DHW)" mode the LCP M multifunctional unit heats water in the second condenser, absorbing the evaporative cooling capacity in air by means of a finned block heat exchanger.

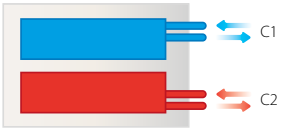

Cooling and hot water production through total recovery

In the "Chiller + DHW" mode the LCP M multifunctional unit can produce chilled water with the simultaneous production of high-temperature hot water for sanitary use, thanks to total heat recovery.

Simultaneous

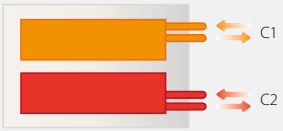

Hot water production (for example for sanitary use) simultaneously with heating

In the "Simultaneous DHW Production and Heating" mode the LCP M multifunctional unit heats water in parallel, optimally exploiting the complete independence of its thermodynamic circuits.
Capacity is equally divided between the two circuits.

Simultaneous

The solution to the problem of defrosting

During the wintertime period, especially with temperatures ranging between -3°C and +3°C, the high ambient relative humidity causes the formation of water condensation around the exchanger fins.
Since the exchanger is at a lower temperature than the outdoor air, the water in contact with it ends up hindering the heat exchange necessary for the system to work correctly.
A defrost cycle is a temporary reversal of the thermodynamic cycle which switches the unit into the summer mode and melts the ice present between fins.
This phase is obviously problematic, since the cooling cycle warms up the exchanger by drawing heat from the room that was previously being heated. The circuit that is defrosting will draw heat on the user side (that is, not on the DHW side) if the unit is LCP M, and will heat on the hot water user side if the unit is LCP P.

Separate defrosting



The LCP unit reduces this problem with the following technical innovations:

- The two thermodynamic circuits in the LCP M LCP P are completely independent and while one defrosts, the other circuit is able to ensure continuity in the unit's operation, with practically no thermal discomfort for the user.
- Hydrophilic coils are installed; these break down the drops of water into particles and reduce the obstruction of the space between one fin and another caused by ice build-up. Thanks to a lower surface tension, the water tends to slide and precipitate by gravity, preventing the formation of frost at low temperatures.
- The software which manages the defrost cycle minimizes the time it takes to complete it and only acts when it is really necessary. The fans are pushed to their maximum capacity at just the right time, that is, when the ice is no longer stuck to the fins, and mechanically ejects it from the heat exchanger.



CONFIGURATION

The models are completely configurable by selecting the version and the options. To the right is shown an example of configuration.

Version	Fields▶	1	2	3	4	5	6	7	8	9	10	11	12
LCP144PL		0	C	1	0	1	C	P	1	0	0	G	3

To verify the compatibility of the options, use the selection software or the price list.

AVAILABLE VERSIONS

2-pipe system versions
LCP..MS Standard execution
LCP-ML Low noise execution

4-pipe system versions
LCP..PS Standard execution
LCP-PL Low noise execution

CONFIGURATION OPTIONS

1 - POWER SUPPLY
- **0** 400/3/50 + N
- **1** 400/3/50 with transformer
- **2** 400/3/50 + N + Circuit breakers
- **3** 400/3/50 with transformer+ Circuit breakers

2 - CONTROL MICROPROCESSOR AND THERMAL EXPANSION VALVE
- **C** Programmable (LCD 8x22 display) + mechanical expansion valve

3 - WATER PUMP ON USER SIDE
- **0** Absent
- **1** Single pump
- **2** Uprated single pump
- **3** Dual pump for combined operation
- **4** Dual uprated pump for combined operation
- **5** Dual pump with timed rotation
- **6** Dual uprated pump with timed rotation

4 - BUFFER TANK
- **0** Absent
- **S** Buffer tank on user side
- **R** Buffer tank on recovery side

5 - WATER PUMP ON RECOVERY SIDE
- **0** Absent
- **1** Single pump
- **2** Uprated single pump
- **3** Dual pump for combined operation
- **4** Dual uprated pump for combined operation
- **5** Dual pump with timed rotation
- **6** Dual uprated pump with timed rotation

6 - AIR FLOW MODULATION
- **C** Condensation control with fans adjusted by potentiometer
- **E** Condensation control, "EC brushless" electronically controlled fans

7 - ANTIFREEZE KIT
- **0** Absent
- **E** Present, basic unit (heating element only on exchangers)
- **P** Present, unit with pump/s and expansion tank
- **S** Present, unit with pump/s, expansion tank and tank

8 - REMOTE COMMUNICATION
- **0** Absent
- **1** RS485 Serial board (Modbus or Carel protocol)
- **2** Lonworks serial board
- **3** GSM modem kit
- **4** Ethernet card (SNMP or BACNET protocol) + clock card
- **5** Ethernet card + clock card + supervision software

9 - HEAT EXCHANGER CONSTRUCTION ON REQUEST
- **0** Standard
- **R** Copper / copper exchangers
- **C** Cataphoresis
- **B** Fins pre-coated with epoxy paint

10 - PACKING
- **0** Standard
- **1** Wooden crate
- **2** Wooden case

11 - VIBRATION ISOLATION
- **0** Absent
- **G** Rubber vibration dampers at the base of the unit
- **M** Spring vibration dampers at the base of the unit

12 - REMOTE CONTROL
- **0** Absent
- **3** Remote display for programmable microprocessor

ACCESSORIES

- **A** Power factor correction capacitors
- **B** Soft-starter kit
- **C** ON/OFF status of the compressors
- **D** Four Victaulic couplings for quick water IN-OUT connection
- **E** Outdoor temperature probe for setpoint compensation
- **F** Pressure gauges
- **G** Regulating filter kit (solenoid and tap on the liquid line)
- **H** Normative reference other than "97/23/CE - PED"
- **I** Unit lifting kit
- **L** Finned heat exchanger protective grille
- **M** Metal filters for protecting finned heat exchanger

Rated technical data of models for 2-pipe systems + DHW

LCP MS		41	51	61	71	81	94	104	124
Cooling mode (1) (E)									
Cooling Capacity	kW	51,4	56,2	67,3	73,8	82,5	102	111	134
Total power input	kW	16,2	18,3	20,8	23,4	27,0	32,8	37,0	44,1
EER	-	3,18	3,08	3,24	3,15	3,05	3,11	3,00	3,04
ESEER	-	3,58	3,67	3,69	3,72	3,74	4,14	4,29	3,82
Eurovent Efficiency Class	-	A	B	A	A	B	A	B	B
User Water Pressure Drops	l/h	8874	9695	11616	12743	14227	17571	19157	23115
User side water pump available pressure head	kPa	29	34	34	41	32	37	43	45
Operation of the cooling and heating in total heat recovery (2)									
Cooling Capacity	kW	50,6	55,8	65,8	72,8	83,6	101	112	130
Heating Capacity	kW	65,6	72,7	85,0	94,4	108	131	145	169
Total power input	kW	15,8	17,7	20,2	22,7	25,4	31,5	35,3	40,4
Total COP	-	7,37	7,25	7,47	7,36	7,53	7,39	7,26	7,41
Cooling side Water Pressure Drops	l/h	8734	9635	11354	12568	14420	17500	19256	22499
Cooling side water pump available pressure head	kPa	28	33	33	40	33	37	44	43
Heating side Water Pressure Drops	l/h	11335	12548	14680	16294	18621	22704	25082	29172
Heatin side water pump available pressure head	kPa	45	54	53	65	54	60	72	70
Heating mode (3) (E)									
Heating Capacity	kW	56,6	62,4	73,3	81,3	89,8	112	124	148
Total power input	kW	16,3	18,2	21,2	23,7	26,5	32,5	36,2	45,3
COP	-	3,48	3,43	3,46	3,43	3,39	3,45	3,42	3,26
Eurovent Efficiency Class	-	A	A	A	A	A	A	A	A
User Water Flow Rate	l/h	9776	10784	12668	14037	15534	19368	21389	25540
User Water Pressure Drops	kPa	34	41	41	50	39	45	54	55
General Data									
Maximum absorbed current	A	41	44	51	55	66	81	87	96
Startup current	A	159	162	185	183	191	194	198	220
Startup current with softstarter	A	104	105	121	119	124	126	129	143
n° of scroll compressor/ circuits	-	2/2	2/2	2/2	2/2	2/2	4/2	4/2	4/2
Buffer tank	dm^3	200	200	220	220	220	340	340	600
Sound power level (4) (E)	dB(A)	80	80	81	81	81	82	82	84
Weight with pump and tank	kg	680	690	800	810	850	1190	1210	1530

(1) Water temperature 12/7 °C, outdoor air temperature 35 °C (UNI EN 14511:2011)
(2) Chilled water temperature 12/7 °C, recovery water temperature 40/45 °C
(3) Water temperature 40/45 °C, outdoor air temperature 7 °C D.B. - 6 °C W.B. (UNI EN 14511:2011)
(4) Sound power level measured according to UNI EN ISO 9614



Rated technical data of models for 2-pipe systems + DHW

LCP MS		144	164	194	214	244	274	294	324
Cooling mode (1) (E)									
Cooling Capacity	kW	147	166	193	220	237	263	298	313
Total power input	kW	49,2	55,6	67,1	75,6	84,3	92,4	103	117
EER	-	2,99	2,98	2,87	2,9	2,81	2,85	2,89	2,68
ESEER	-	3,88	4,01	4,12	4,19	4,01	3,93	3,95	3,83
Eurovent Efficiency Class	-	B	B	C	B	C	C	C	D
User Water Pressure Drops	l/h	25411	28617	33237	37885	40949	45370	51321	53968
User side water pump available pressure head	kPa	54	49	46	59	58	39	48	63
Operation of the cooling and heating in total heat recovery (2)									
Cooling Capacity	kW	144	164	197	221	245	268	303	325
Heating Capacity	kW	188	213	254	288	318	347	393	426
Total power input	kW	45,6	51,3	60,2	70,4	77,0	83,6	94,6	106,1
Total COP	-	7,27	7,36	7,49	7,24	7,31	7,36	7,37	7,08
Cooling side Water Pressure Drops	l/h	24877	28350	33958	38164	42199	46159	52292	56090
Cooling side water pump available pressure head	kPa	52	48	48	60	61	40	49	67
Heating side Water Pressure Drops	l/h	32371	36806	43914	49724	54844	60025	67893	73463
Heatin side water pump available pressure head	kPa	86	79	78	98	98	79	98	113
Heating mode (3) (E)									
Heating Capacity	kW	164	182	212	248	268	296	333	343
Total power input	kW	50,4	56,2	64,8	74,7	80,1	88,7	99,2	110,3
COP	-	3,24	3,23	3,28	3,32	3,35	3,34	3,35	3,11
Eurovent Efficiency Class	-	A	A	A	A	A	A	A	B
User Water Flow Rate	l/h	28269	31445	36720	42793	46342	51196	57519	59230
User Water Pressure Drops	kPa	67	59	56	75	72	60	73	76
General Data									
Maximum absorbed current	A	105	126	148	167	190	215	229	242
Startup current	A	222	241	307	318	382	398	464	472
Startup current with softstarter	A	145	157	200	207	248	259	301	307
n° of scroll compressor/ circuits	-	4/2	4/2	4/2	4/2	4/2	4/2	4/2	4/2
Buffer tank	dm^3	600	600	600	600	600	765	765	765
Sound power level (4) (E)	dB(A)	84	85	85	86	86	86	87	87
Weight with pump and tank	kg	1550	1690	1710	1890	1910	2260	2290	2320

(1) Water temperature 12/7 °C, outdoor air temperature 35 °C (UNI EN 14511:2011)
(2) Chilled water temperature 12/7 °C, recovery water temperature 40/45 °C
(3) Water temperature 40/45 °C, outdoor air temperature 7 °C D.B. - 6 °C W.B. (UNI EN 14511:2011)
(4) Sound power level measured according to UNI EN ISO 9614

Rated technical data of models for 2-pipe systems + DHW

LCP ML		41	51	61	71	81	94	104	124
Cooling mode (1) (E)									
Cooling Capacity	kW	49,4	53,5	64,7	70,4	78,3	97,7	105	127
Total power input	kW	16,4	18,8	20,9	24,0	28,0	33,4	38,3	45,0
EER	-	3	2,84	3,09	2,94	2,79	2,92	2,75	2,82
ESEER	-	3,47	3,52	3,6	3,58	3,58	4,05	4,16	3,98
Eurovent Efficiency Class	-	B	C	B	B	C	B	C	C
User Water Pressure Drops	l/h	8522	9237	11172	12153	13513	16855	18189	21904
User side water pump available pressure head	kPa	27	31	32	38	30	34	39	41
Operation of the cooling and heating in total heat recovery (2)									
Cooling Capacity	kW	50,6	55,8	65,8	72,8	83,6	101	112	130
Heating Capacity	kW	65,6	72,7	85,0	94,4	108	131	145	169
Total power input	kW	15,8	17,7	20,2	22,7	25,4	31,5	35,3	40,4
Total COP	-	7,37	7,25	7,47	7,36	7,53	7,39	7,26	7,41
Cooling side Water Pressure Drops	l/h	8734	9635	11354	12568	14420	17500	19256	22499
Cooling side water pump available pressure head	kPa	28	33	33	40	33	37	44	43
Heating side Water Pressure Drops	l/h	11335	12548	14680	16294	18621	22704	25082	29172
Heatin side water pump available pressure head	kPa	45	54	53	65	54	60	72	70
Heating mode (3) (E)									
Heating Capacity	kW	56,0	61,8	72,0	79,8	89,0	111	121	141
Total power input	kW	15,6	17,5	20,2	22,7	25,6	31,2	34,9	42,9
COP	-	3,59	3,52	3,56	3,51	3,48	3,54	3,48	3,29
Eurovent Efficiency Class	-	A	A	A	A	A	A	A	A
User Water Flow Rate	l/h	9684	10682	12436	13780	15388	19097	20986	24392
User Water Pressure Drops	kPa	34	40	40	48	38	44	52	50
General Data									
Maximum absorbed current	A	41	44	51	55	66	81	87	96
Startup current	A	159	162	185	183	191	194	198	220
Startup current with softstarter	A	104	105	121	119	124	126	129	143
n° of scroll compressor/ circuits	-	2/2	2/2	2/2	2/2	2/2	4/2	4/2	4/2
Buffer tank	dm^3	200	200	220	220	220	340	340	600
Sound power level (4) (E)	dB(A)	73	74	76	76	76	77	77	79
Weight with pump and tank	kg	690	700	810	820	860	1210	1230	1550

(1) Water temperature 12/7 °C, outdoor air temperature 35 °C (UNI EN 14511:2011)
(2) Chilled water temperature 12/7 °C, recovery water temperature 40/45 °C
(3) Water temperature 40/45 °C, outdoor air temperature 7 °C D.B. - 6 °C W.B. (UNI EN 14511:2011)
(4) Sound power level measured according to UNI EN ISO 9614



Rated technical data of models for 2-pipe systems + DHW

LCP ML		144	164	194	214	244	274	294	324
Cooling mode (1) (E)									
Cooling Capacity	kW	138	153	187	214	232	258	291	303
Total power input	kW	51,2	59,2	67,3	76,1	85,0	92,5	104,3	118,7
EER	-	2,69	2,59	2,78	2,82	2,73	2,79	2,79	2,55
ESEER	-	3,98	3,98	3,98	4,12	4,02	3,98	3,96	3,92
Eurovent Efficiency Class	-	D	D	C	C	C	C	C	D
User Water Pressure Drops	l/h	23786	26453	32255	36969	39985	44458	50140	52308
User side water pump available pressure head	kPa	48	42	44	57	55	38	46	60
Operation of the cooling and heating in total heat recovery (2)									
Cooling Capacity	kW	144	164	197	221	245	268	303	325
Heating Capacity	kW	188	213	254	288	318	347	393	426
Total power input	kW	45,6	51,3	60,2	70,4	77,0	83,6	94,6	106,1
Total COP	-	7,27	7,36	7,49	7,24	7,31	7,36	7,37	7,08
Cooling side Water Pressure Drops	l/h	24877	28350	33958	38164	42199	46159	52292	56090
Cooling side water pump available pressure head	kPa	52	48	48	60	61	40	49	67
Heating side Water Pressure Drops	l/h	32371	36806	43914	49724	54844	60025	67893	73463
Heatin side water pump available pressure head	kPa	86	79	78	98	98	79	98	113
Heating mode (3) (E)									
Heating Capacity	kW	156	179	211	247	268	295	333	343
Total power input	kW	48,0	54,0	62,5	72,1	77,8	86,4	96,9	108
COP	-	3,26	3,30	3,38	3,42	3,45	3,41	3,43	3,17
Eurovent Efficiency Class	-	A	A	A	A	A	A	A	B
User Water Flow Rate	l/h	27027	30857	36549	42640	46342	50963	57519	59230
User Water Pressure Drops	kPa	62	57	56	75	72	59	73	76
General Data									
Maximum absorbed current	A	105	126	148	167	190	215	229	242
Startup current	A	222	241	307	318	382	398	464	472
Startup current with softstarter	A	145	157	200	207	248	259	301	307
n° of scroll compressor/ circuits	-	4/2	4/2	4/2	4/2	4/2	4/2	4/2	4/2
Buffer tank	dm^3	600	600	600	600	600	765	765	765
Sound power level (4) §(E)	dB(A)	79	80	81	82	82	83	83	83
Weight with pump and tank	kg	1570	1710	1730	1920	1940	2290	2320	2350

(1) Water temperature 12/7 °C, outdoor air temperature 35 °C (UNI EN 14511:2011)
(2) Chilled water temperature 12/7 °C, recovery water temperature 40/45 °C
(3) Water temperature 40/45 °C, outdoor air temperature 7 °C D.B. - 6 °C W.B. (UNI EN 14511:2011)
(4) Sound power level measured according to UNI EN ISO 9614

Rated technical data of models for 4-pipe systems

LCP PS		41	51	61	71	81	94	104	124
Cooling mode (1) (E)									
Cooling Capacity	kW	51,4	56,2	67,3	73,8	82,5	102	111	134
Total power input	kW	16,2	18,3	20,8	23,4	27,0	32,8	37,0	44,1
EER	-	3,18	3,08	3,24	3,15	3,05	3,11	3,00	3,04
ESEER	-	3,58	3,67	3,69	3,72	3,74	4,14	4,29	3,82
Eurovent Efficiency Class	-	A	B	A	A	B	A	B	B
User Water Pressure Drops	l/h	8874	9695	11616	12743	14227	17571	19157	23115
User side water pump available pressure head	kPa	29	34	34	41	32	37	43	45
Operation of the cooling and heating in total heat recovery (2)									
Cooling Capacity	kW	50,6	55,8	65,8	72,8	83,6	101	112	130
Heating Capacity	kW	65,6	72,7	85,0	94,4	108	131	145	169
Total power input	kW	15,8	17,7	20,2	22,7	25,4	31,5	35,3	40,4
Total COP	-	7,37	7,25	7,47	7,36	7,53	7,39	7,26	7,41
Cooling side Water Pressure Drops	l/h	8734	9635	11354	12568	14420	17500	19256	22499
Cooling side water pump available pressure head	kPa	28	33	33	40	33	37	44	43
Heating side Water Pressure Drops	l/h	11335	12548	14680	16294	18621	22704	25082	29172
Heatin side water pump available pressure head	kPa	45	54	53	65	54	60	72	70
Heating mode (3) (E)									
Heating Capacity	kW	56,6	62,4	73,3	81,3	89,8	112	124	148
Total power input	kW	16,3	18,2	21,2	23,7	26,5	32,5	36,2	45,3
COP	-	3,48	3,43	3,46	3,43	3,39	3,45	3,42	3,26
Eurovent Efficiency Class	-	A	A	A	A	A	A	A	A
User Water Flow Rate	l/h	9776	10784	12668	14037	15534	19368	21389	25540
User Water Pressure Drops	kPa	34	41	41	50	39	45	54	55
General Data									
Maximum absorbed current	A	41	44	51	55	66	81	87	96
Startup current	A	159	162	185	183	191	194	198	220
Startup current with softstarter	A	104	105	121	119	124	126	129	143
n° of scroll compressor/ circuits	-	2/2	2/2	2/2	2/2	2/2	4/2	4/2	4/2
Buffer tank	dm^3	200	200	220	220	220	340	340	600
Sound power level (4) (E)	dB(A)	80	80	81	81	81	82	82	84
Weight with pump and tank	kg	680	690	800	810	850	1190	1210	1530

(1) Water temperature 12/7 °C, outdoor air temperature 35 °C (UNI EN 14511:2011)
(2) Chilled water temperature 12/7 °C, recovery water temperature 40/45 °C
(3) Water temperature 40/45 °C, outdoor air temperature 7 °C D.B. - 6 °C W.B. (UNI EN 14511:2011)
(4) Sound power level measured according to UNI EN ISO 9614



Rated technical data of models for 4-pipe systems

LCP PS		144	164	194	214	244	274	294	324
Cooling mode (1) (E)									
Cooling Capacity	kW	147	166	193	220	237	263	298	313
Total power input	kW	49,2	55,6	67,1	75,6	84,3	92,4	103	117
EER	-	2,99	2,98	2,87	2,9	2,81	2,85	2,89	2,68
ESEER	-	3,88	4,01	4,12	4,19	4,01	3,93	3,95	3,83
Eurovent Efficiency Class	-	B	B	C	B	C	C	C	D
User Water Pressure Drops	l/h	25411	28617	33237	37885	40949	45370	51321	53968
User side water pump available pressure head	kPa	54	49	46	59	58	39	48	63
Operation of the cooling and heating in total heat recovery (2)									
Cooling Capacity	kW	144	164	197	221	245	268	303	325
Heating Capacity	kW	188	213	254	288	318	347	393	426
Total power input	kW	45,6	51,3	60,2	70,4	77,0	83,6	94,6	106
Total COP	-	7,27	7,36	7,49	7,24	7,31	7,36	7,37	7,08
Cooling side Water Pressure Drops	l/h	24877	28350	33958	38164	42199	46159	52292	56090
Cooling side water pump available pressure head	kPa	52	48	48	60	61	40	49	67
Heating side Water Pressure Drops	l/h	32371	36806	43914	49724	54844	60025	67893	73463
Heatin side water pump available pressure head	kPa	86	79	78	98	98	79	98	113
Heating mode (3) (E)									
Heating Capacity	kW	163,6	181,8	212,3	247,7	268,1	296	333	343
Total power input	kW	50,4	56,2	64,8	74,7	80,1	88,7	99,2	110
COP	-	3,24	3,23	3,28	3,32	3,35	3,34	3,35	3,11
Eurovent Efficiency Class	-	A	A	A	A	A	A	A	B
User Water Flow Rate	l/h	28269	31445	36720	42793	46342	51196	57519	59230
User Water Pressure Drops	kPa	67	59	56	75	72	60	73	76
General Data									
Maximum absorbed current	A	105	126	148	167	190	215	229	242
Startup current	A	222	241	307	318	382	398	464	472
Startup current with softstarter	A	145	157	200	207	248	259	301	307
n° of scroll compressor/ circuits	-	4/2	4/2	4/2	4/2	4/2	4/2	4/2	4/2
Buffer tank	dm^3	600	600	600	600	600	765	765	765
Sound power level (4) (E)	dB(A)	84	85	85	86	86	86	87	87
Weight with pump and tank	kg	1550	1690	1710	1890	1910	2260	2290	2320

(1) Water temperature 12/7 °C, outdoor air temperature 35 °C (UNI EN 14511:2011)
(2) Chilled water temperature 12/7 °C, recovery water temperature 40/45 °C
(3) Water temperature 40/45 °C, outdoor air temperature 7 °C D.B. - 6 °C W.B. (UNI EN 14511:2011)
(4) Sound power level measured according to UNI EN ISO 9614

Rated technical data of models for 4-pipe systems

LCP PL		41	51	61	71	81	94	104	124
Cooling mode (1) (E)									
Cooling Capacity	kW	49,4	53,5	64,7	70,4	78,3	97,7	105	127
Total power input	kW	16,4	18,8	20,9	24,0	28,0	33,4	38,3	45,0
EER	-	3,00	2,84	3,09	2,94	2,79	2,92	2,75	2,82
ESEER	-	3,47	3,52	3,6	3,58	3,58	4,05	4,16	3,98
Eurovent Efficiency Class	-	B	C	B	B	C	B	C	C
User Water Pressure Drops	l/h	8522	9237	11172	12153	13513	16855	18189	21904
User side water pump available pressure head	kPa	27	31	32	38	30	34	39	41
Operation of the cooling and heating in total heat recovery (2)									
Cooling Capacity	kW	50,6	55,8	65,8	72,8	83,6	101	112	130
Heating Capacity	kW	65,6	72,7	85,0	94,4	108	131	145	169
Total power input	kW	15,8	17,7	20,2	22,7	25,4	31,5	35,3	40,4
Total COP	-	7,37	7,25	7,47	7,36	7,53	7,39	7,26	7,41
Cooling side Water Pressure Drops	l/h	8734	9635	11354	12568	14420	17500	19256	22499
Cooling side water pump available pressure head	kPa	28	33	33	40	33	37	44	43
Heating side Water Pressure Drops	l/h	11335	12548	14680	16294	18621	22704	25082	29172
Heatin side water pump available pressure head	kPa	45	54	53	65	54	60	72	70
Heating mode (3) (E)									
Heating Capacity	kW	56,0	61,8	72,0	79,8	89,0	111	121	141
Total power input	kW	15,6	17,5	20,2	22,7	25,6	31,2	34,9	42,9
COP	-	3,59	3,52	3,56	3,51	3,48	3,54	3,48	3,29
Eurovent Efficiency Class	-	A	A	A	A	A	A	A	A
User Water Flow Rate	l/h	9684	10682	12436	13780	15388	19097	20986	24392
User Water Pressure Drops	kPa	34	40	40	48	38	44	52	50
General Data									
Maximum absorbed current	A	41	44	51	55	66	81	87	96
Startup current	A	159	162	185	183	191	194	198	220
Startup current with softstarter	A	104	105	121	119	124	126	129	143
n° of scroll compressor/ circuits	-	2/2	2/2	2/2	2/2	2/2	4/2	4/2	4/2
Buffer tank	dm^3	200	200	220	220	220	340	340	600
Sound power level (4) (E)	dB(A)	73	74	76	76	76	77	77	79
Weight with pump and tank	kg	690	700	810	820	860	1210	1230	1550

(1) Water temperature 12/7 °C, outdoor air temperature 35 °C (UNI EN 14511:2011)
(2) Chilled water temperature 12/7 °C, recovery water temperature 40/45 °C
(3) Water temperature 40/45 °C, outdoor air temperature 7 °C D.B. - 6 °C W.B. (UNI EN 14511:2011)
(4) Sound power level measured according to UNI EN ISO 9614



Rated technical data of models for 4-pipe systems

LCP PL		144	164	194	214	244	274	294	324
Cooling mode (1) (E)									
Cooling Capacity	kW	138	153	187	214	232	258	291	303
Total power input	kW	51,2	59,2	67,3	76,1	85,0	92,5	104	119
EER	-	2,69	2,59	2,78	2,82	2,73	2,79	2,79	2,55
ESEER	-	3,98	3,98	3,98	4,12	4,02	3,98	3,96	3,92
Eurovent Efficiency Class	-	D	D	C	C	C	C	C	D
User Water Pressure Drops	l/h	23786	26453	32255	36969	39985	44458	50140	52308
User side water pump available pressure head	kPa	48	42	44	57	55	38	46	60
Operation of the cooling and heating in total heat recovery (2)									
Cooling Capacity	kW	144	164	197	221	245	268	303	325
Heating Capacity	kW	188	213	254	288	318	347	393	426
Total power input	kW	45,6	51,3	60,2	70,4	77,0	83,6	94,6	106
Total COP	-	7,27	7,36	7,49	7,24	7,31	7,36	7,37	7,08
Cooling side Water Pressure Drops	l/h	24877	28350	33958	38164	42199	46159	52292	56090
Cooling side water pump available pressure head	kPa	52	48	48	60	61	40	49	67
Heating side Water Pressure Drops	l/h	32371	36806	43914	49724	54844	60025	67893	73463
Heatin side water pump available pressure head	kPa	86	79	78	98	98	79	98	113
Heating mode (3) (E)									
Heating Capacity	kW	156	179	211	247	268	295	333	343
Total power input	kW	48,0	54,0	62,5	72,1	77,8	86,4	96,9	108
COP	-	3,26	3,3	3,38	3,42	3,45	3,41	3,43	3,17
Eurovent Efficiency Class	-	A	A	A	A	A	A	A	B
User Water Flow Rate	l/h	27027	30857	36549	42640	46342	50963	57519	59230
User Water Pressure Drops	kPa	62	57	56	75	72	59	73	76
General Data									
Maximum absorbed current	A	105	126	148	167	190	215	229	242
Startup current	A	222	241	307	318	382	398	464	472
Startup current with softstarter	A	145	157	200	207	248	259	301	307
n° of scroll compressor/ circuits	-	4/2	4/2	4/2	4/2	4/2	4/2	4/2	4/2
Buffer tank	dm^3	600	600	600	600	600	765	765	765
Sound power level (4) (E)	dB(A)	79	80	81	82	82	83	83	83
Weight with pump and tank	kg	1570	1710	1730	1920	1940	2290	2320	2350

(1) Water temperature 12/7 °C, outdoor air temperature 35 °C (UNI EN 14511:2011)
(2) Chilled water temperature 12/7 °C, recovery water temperature 40/45 °C
(3) Water temperature 40/45 °C, outdoor air temperature 7 °C D.B. - 6 °C W.B. (UNI EN 14511:2011)
(4) Sound power level measured according to UNI EN ISO 9614

Dimensional drawings

LCP 41 - 51

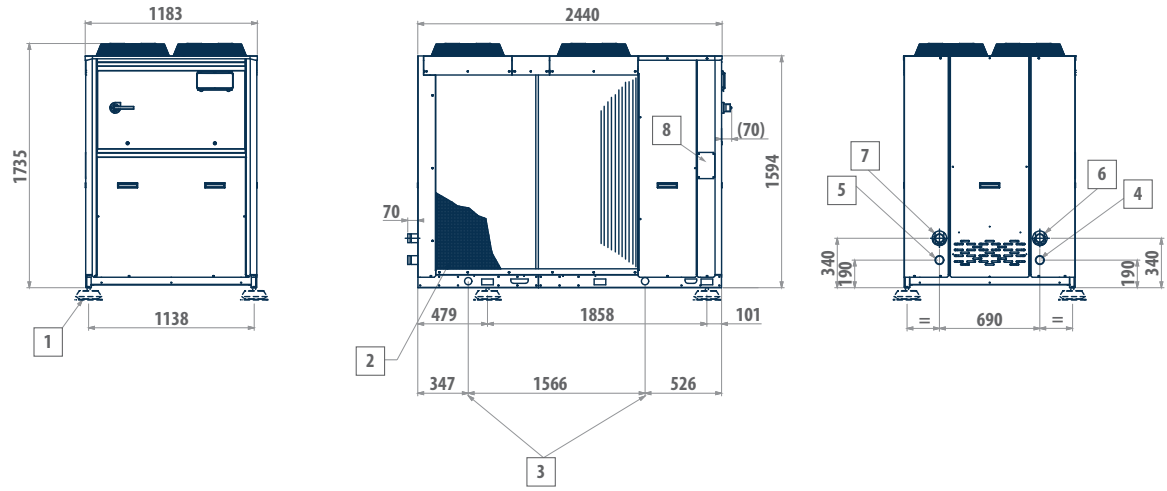

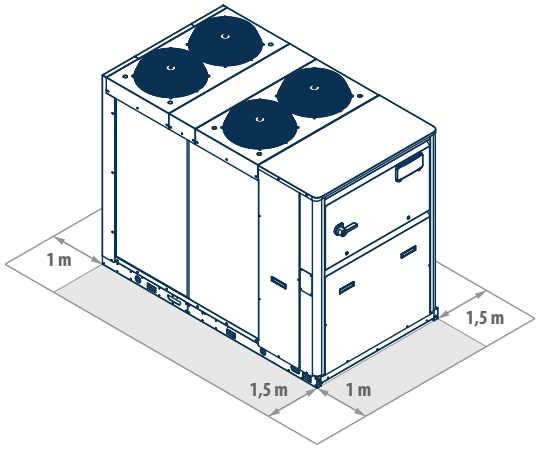

LEGEND	
1	Vibration dampers
2	Protective grille (optional)
3	Fastening points
4	Hot water inlet (Victaulic 2")
5	Cold water inlet (Victaulic 2")
6	Hot water outlet (Victaulic 2")
7	Cold water outlet (Victaulic 2")
8	Power supply input

Model	Version	
LCP 41	M-P	S-L
LCP 51	M-P	S-L



Dimensional drawings

LCP 61 - 81

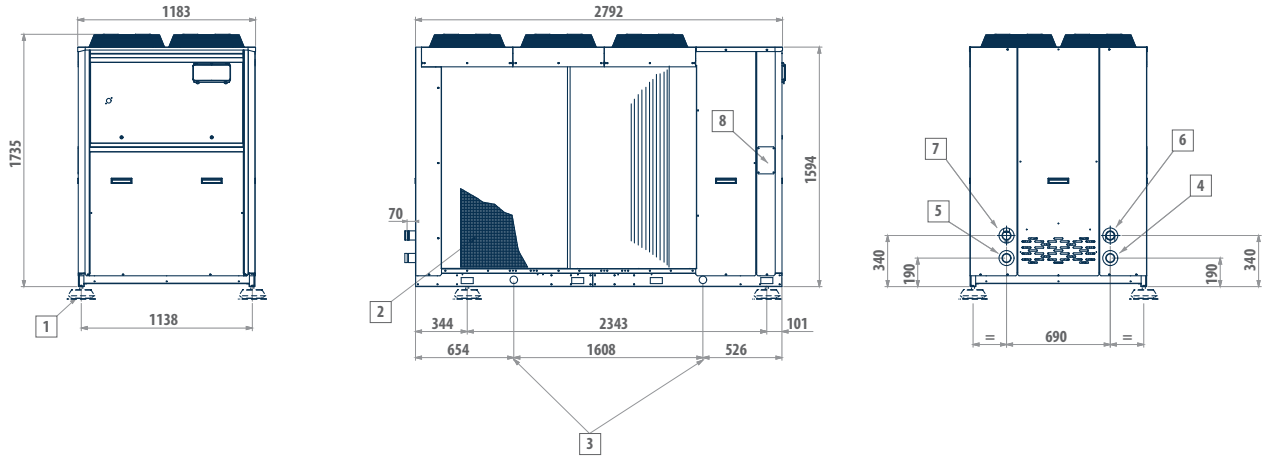

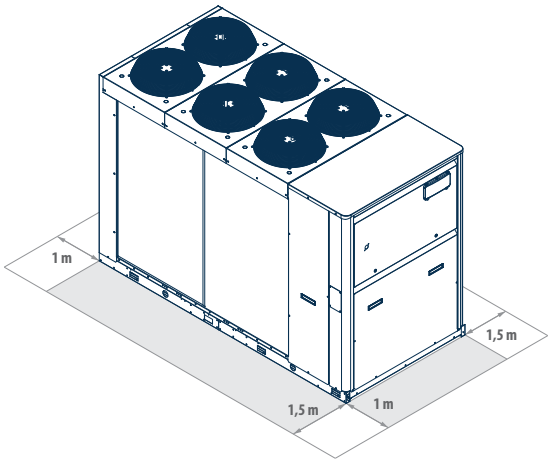

LEGEND	
1	Vibration dampers
2	Protective grille (optional)
3	Fastening points
4	Hot water inlet (Victaulic 2")
5	Cold water inlet (Victaulic 2")
6	Hot water outlet (Victaulic 2")
7	Cold water outlet (Victaulic 2")
8	Power supply input

Model	Version	
LCP 61	M-P	S-L
LCP 71	M-P	S-L
LCP 81	M-P	S-L

Dimensional drawings

LCP 94 - 104

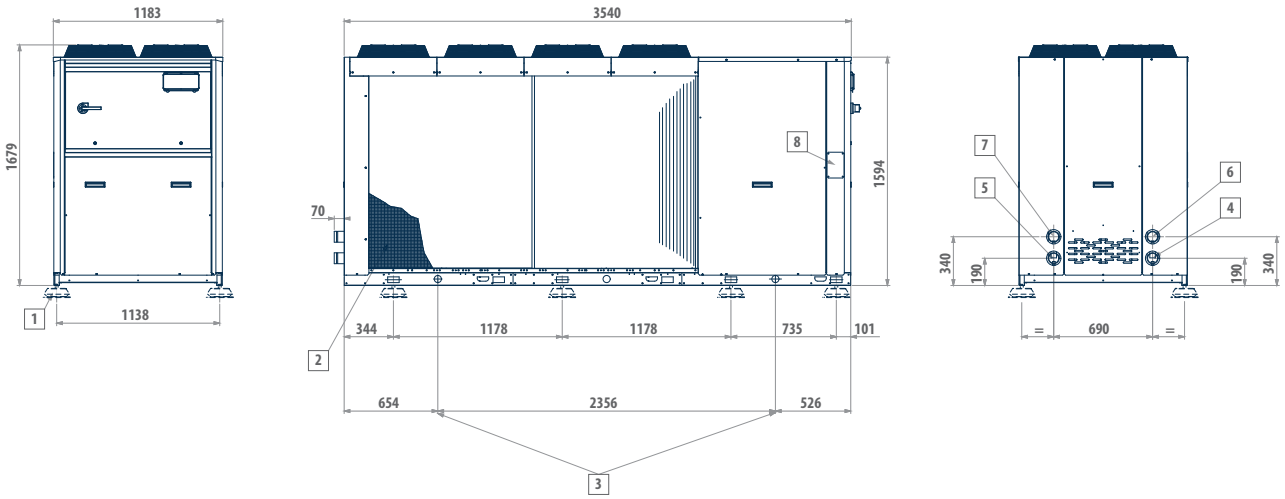

LEGEND	
1	Vibration dampers
2	Protective grille (optional)
3	Fastening points
4	Hot water inlet (Victaulic 2 ½")
5	Cold water inlet (Victaulic 2 ½")
6	Hot water outlet (Victaulic 2 ½")
7	Cold water outlet (Victaulic 2 ½")
8	Power supply input

Model	Version	
LCP 94	M-P	S-L
LCP 104	M-P	S-L



Dimensional drawings

LCP 124 - 194

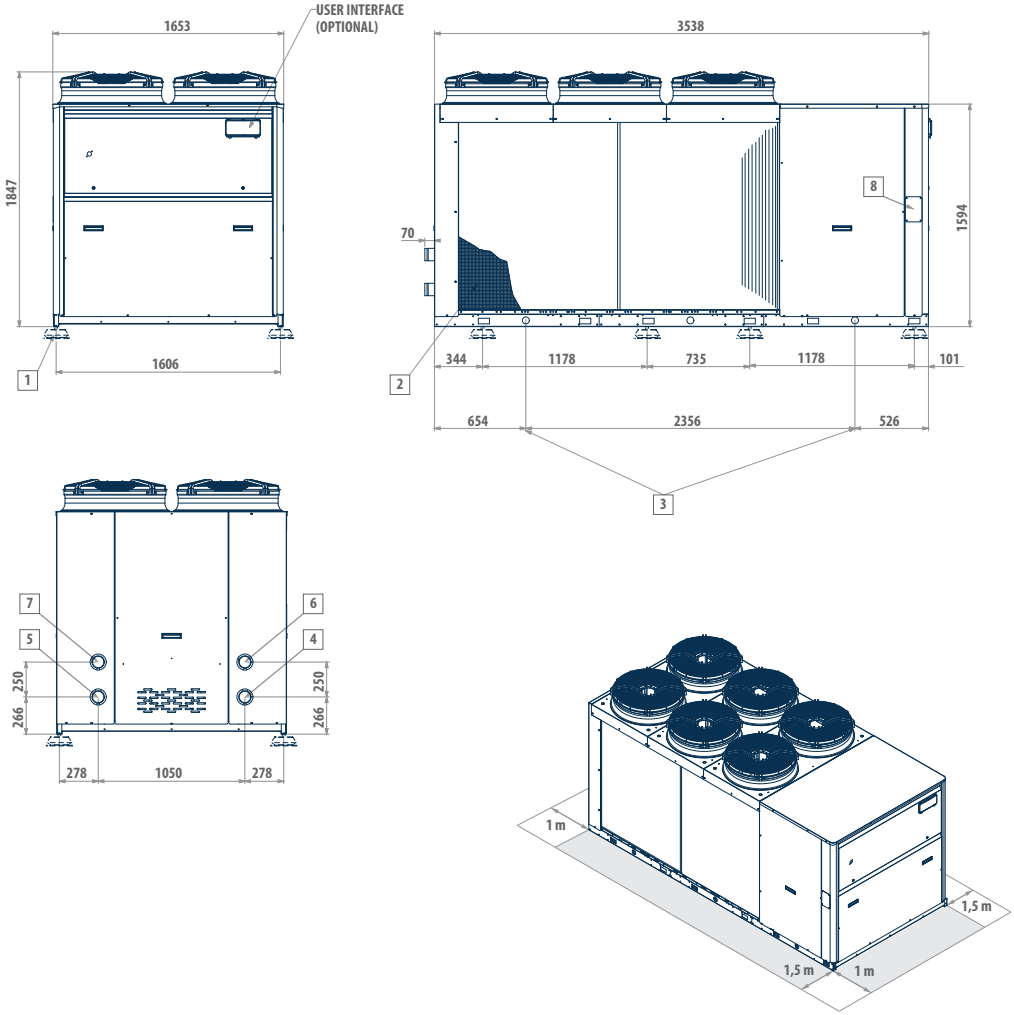

LEGEND	
1	Vibration dampers
2	Protective grille (optional)
3	Fastening points
4	Hot water inlet (Victaulic 3")
5	Cold water inlet (Victaulic 3")
6	Hot water outlet (Victaulic 3")
7	Cold water outlet (Victaulic 3")
8	Power supply input

Model	Version	
LCP 124	M-P	S-L
LCP 144	M-P	S-L
LCP 164	M-P	S-L
LCP 194	M-P	S-L

Dimensional drawings

LCP 214 - 244

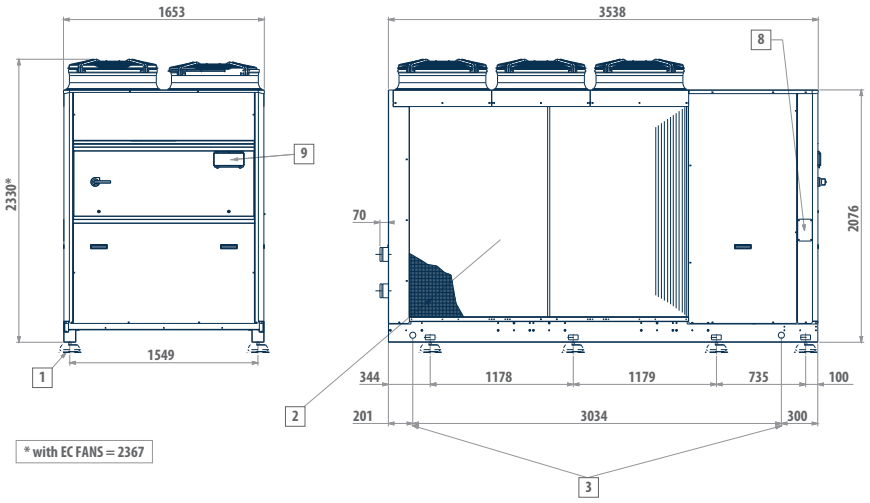

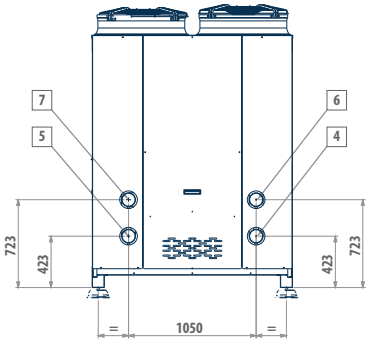

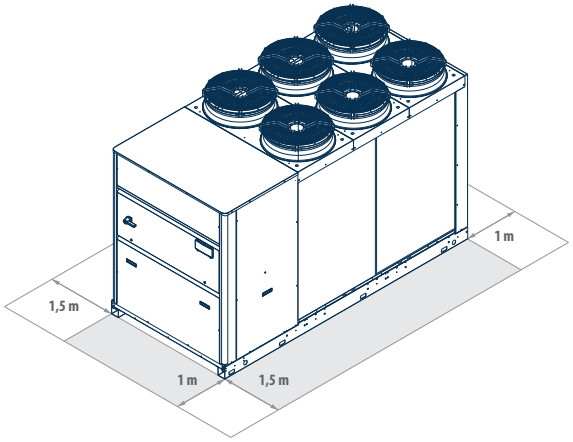

LEGEND	
1	Vibration dampers
2	Protective grille (optional)
3	Fastening points
4	Hot water inlet (Victaulic 4")
5	Cold water inlet (Victaulic 4")
6	Hot water outlet (Victaulic 4")
7	Cold water outlet (Victaulic 4")
8	Power supply input
9	User interface (optional)

Model	Version	
LCP 214	M-P	S-L
LCP 244	M-P	S-L



Dimensional drawings

LCP 274 - 324

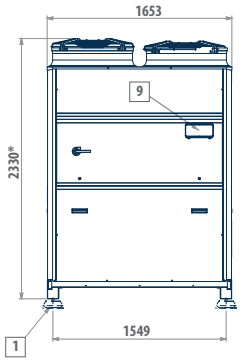

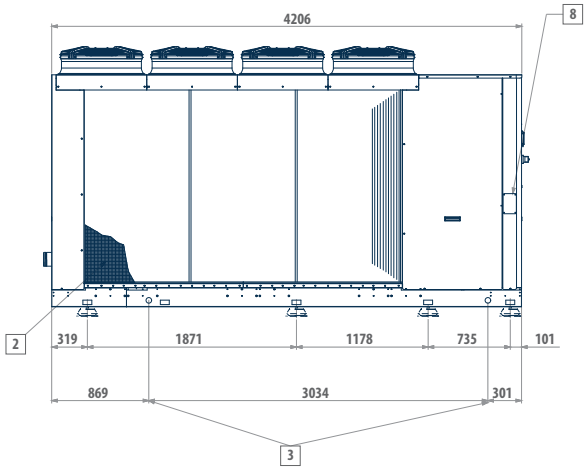

* with EC FANS = 2367

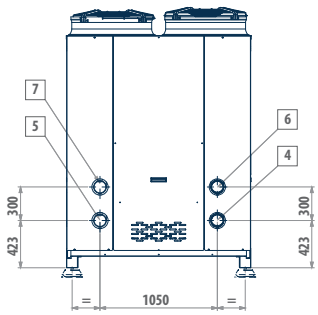

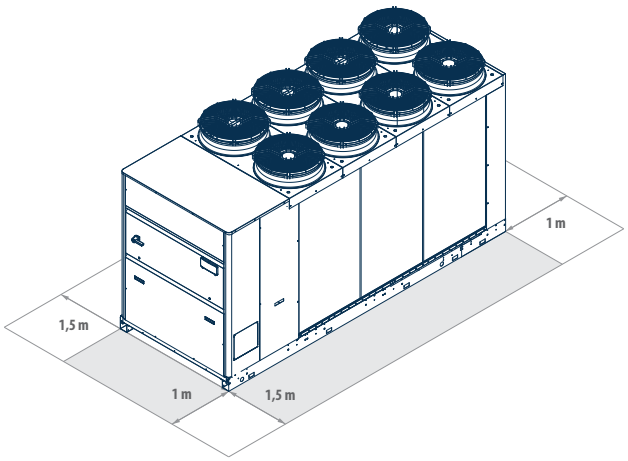

LEGEND	
1	Vibration dampers
2	Protective grille (optional)
3	Fastening points
4	Hot water inlet (Victaulic 4")
5	Cold water inlet (Victaulic 4")
6	Hot water outlet (Victaulic 4")
7	Cold water outlet (Victaulic 4")
8	Power supply input
9	User interface (optional)

Model	Version	
LCP 274	M-P	S-L
LCP 294	M-P	S-L
LCP 324	M-P	S-L

Indoor packaged water-water unit

LEP 50 - 470 kW





Total heat recovery multi-purpo-se unit | Multi-pur-pose unit - 2-pipe system | Multi-pur-pose unit - 4-pipe system | Scroll compressor | R-410A refrigerant | Cooling / Heating

Maximum efficiency with total recovery and dissipation in water.

LEP units are actually multi-purpose, they totally recover the condensation heat and they are characterized by the simultaneous production of cold and hot water. Available for two-pipe systems with the request of DHW production or in four-pipe systems, they are conceived for average-high power applications (multi residential or commercial unit) and they guarantee a high thermodynamic efficiency and a wide configurability both in terms of accessories and in terms of refrigeration cycle.
LEP series is characterized by a reduced size, high thermodynamic cycle COP , no external noise, reduced cooling load and it is composed of 24 models with refrigeration capacity ranging from 50 to 470 kW both for the standard version and the silenced one.
Multi-purpose LEP machines have six water connections linked to three different hydraulic circuits of which a dissipation one (hot or cold) opposed to the consumption. The users differ as for two-pipe system in which there is a hot/cold circuit and just one hot circuit for the production of DHW while in four-pipe systems there is one hot circuit and a cold one.
There is the option to obtain an external sound-proof hydraulic module with circulation pumps for dissipation circuits, users and domestic hot water.

PLUS

- Maximum energy efficiency
- Total condensation heat recovery
- Electronic expansion valve
- Up to 4 compressors
- Remote connectivity to the most common protocols.
- Compact dimensions
- Low-noise level thanks to the paneled structure.

LEP is suitable to the air-conditioning of 2-pipe systems with production of DHW or in 4-pipe systems. In both, the total recovery of the heat ensures remarkable energy savings.

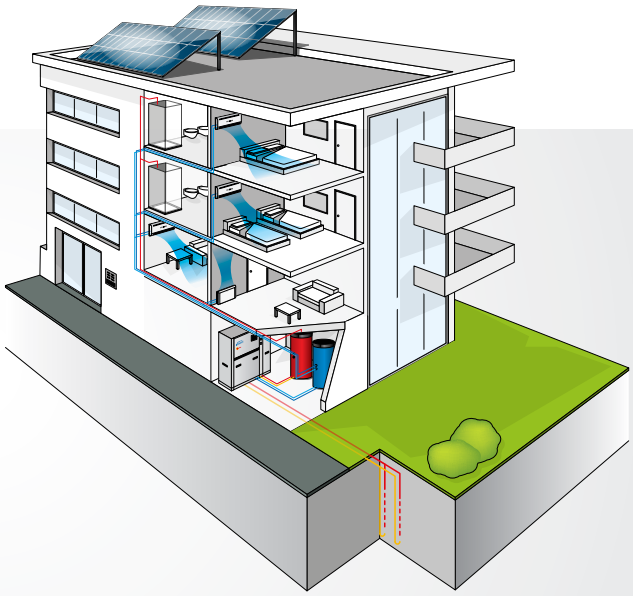



OPERATION MODE

LEP-M: chiller mode

In the "Chiller" mode the unit cools water to air condition the interior on the user side, dissipating the condensation heat by means of water that is cooled in the dissipation exchanger.

LEP-M: chiller + DHW

In the "Chiller + DHW" mode the unit can produce chilled water with the simultaneous production of high-temperature hot water for sanitary use, thanks to total heat recovery.

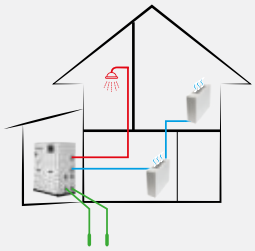

LEP-M: DHW mode

In the "high-temperature sanitary hot water (DHW)" mode the unit heats water in the condenser, dedicated to DHW as needed, dissipating the evaporative cooling capacity by means of water that is heated in the exchanger on the dissipation side.

LEP-M: heat pump mode

In the "heat pump" mode the unit heats the water in the condenser to warm the interior on the user side, dissipating the evaporative cooling capacity by means of water that is heated in the dissipation exchanger.

LEP-P: 4-pipe systems

The four-pipe system has a distribution system that offers both hot water (with respective return lines) and chilled water (with respective return lines). The LEP-P unit has a circuit used for the production of hot water and another one used for the production of cold water.

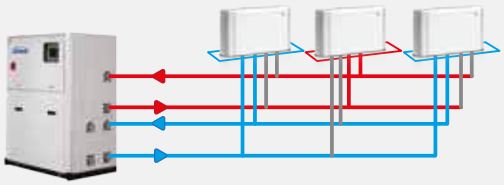

CONFIGURATION

The models are completely configurable by selecting the version and the options. To the right is shown an example of configuration.

Version	Fields	1	2	3	4	5	6	7	8	9
LEP214ML		2	B	P	0	2	G	0	0	B

To verify the compatibility of the options, use the selection software or the price list.

AVAILABLE VERSIONS

2-pipe system versions

LEP..MS	Standard execution
LEP-ML	Low noise execution

4-pipe system versions

LEP..PS	Standard execution
LEP-PL	Low noise execution

CONFIGURATION OPTIONS

1 - POWER SUPPLY

0	400/3/50 + N
2	400/3/50 + N + Circuit breakers

2 - CONTROL MICROPROCESSOR AND THERMAL EXPANSION VALVE

B	Programmable (LCD 8x22 display) + electronic expansion valve

3 – AIR FLOW MODULATION SOURCE SIDE

0	Absent
P	Condensation control with 1-10V modulated output signal

4 – AIR FLOW MODULATION USER SIDE

0	Absent
D	Air flow modulation with output signal in ΔT logic = cost
T	Air flow modulation with output signal in T logic = cost

5 - REMOTE COMMUNICATION

0	Absent
1	RS485 Serial board (Modbus or Carel protocol)
2	Lonworks serial board
3	GSM modem kit
4	Ethernet card (SNMP or BACNET protocol) + clock card
5	Ethernet card + clock card + supervision software

6 - VIBRATION ISOLATION

0	Absent
G	Rubber vibration dampers at the base of the unit
M	Spring vibration dampers at the base of the unit

7 - PACKING

0	Standard
1	Wooden crate
2	Wooden case

8 - REMOTE CONTROL

0	Absent
3	Remote display for programmable microprocessor

9 – INSULATED EXTERNAL HYDRAULIC MODULE SEPARATED FROM THE MAIN UNIT

0	Hydraulic module not present
A	LP user pump + LP dissipation + LP recovery
B	LP user pump + LP modulating dissipation + LP recovery
C	LP user pump + HP dissipation + LP recovery
D	LP user pump + HP modulating dissipation + LP recovery
E	HP user pump + LP dissipation + LP recovery
F	HP user pump + LP modulating dissipation + LP recovery
G	HP user pump + HP dissipation + LP recovery
H	HP user pump + HP modulating dissipation + LP recovery
I	LP user pump + LP dissipation + HP recovery
J	LP user pump + LP modulating dissipation + HP recovery
K	LP user pump + HP dissipation + HP recovery
L	LP user pump + HP modulating dissipation + HP recovery
M	HP user pump + LP dissipation + HP recovery
N	HP user pump + LP modulating dissipation + LP recovery
P	HP user pump + HP dissipation + LP recovery
Q	HP user pump + HP modulating dissipation + LP recovery

ACCESSORIES

A	Power factor correction capacitors
B	Soft-starter kit
C	Service kit (kit of sensors for quick diagnosis)
D	ON/OFF status of the compressors
E	Outdoor temperature probe for setpoint compensation
F	Pressure gauges
G	Six Victaulic couplings for quick water IN-OUT connection
H	Regulating filter kit (solenoid and tap on the liquid line)
I	4-way flow reverse valve on user side in hydraulic module

Rated technical data of models for 2-pipe systems + DHW

LEP M		42	52	62	72	82	92
Cooling mode (1)							
Cooling Capacity	kW	50,8	59,7	69,3	78,0	90,0	100
Total power input	kW	9,0	11,7	12,7	14,6	15,9	18,1
EER	-	5,64	5,12	5,46	5,34	5,68	5,56
ESEER	-	6,04	5,78	6,11	6,01	6,25	6,25
Water flow rate user side	l/h	8776	10330	11974	13485	15537	17337
Pressure drop, user side	kPa	37	49	50	48	38	48
Water flow rate source side	l/h	3414	4073	4677	5286	6044	6760
Pressure drop, source side	kPa	7	9	7	9	7	8
Operation of the cooling and heating in total heat recovery (2)							
Cooling capacity	kW	42,5	50,6	57,8	65,8	75,5	83,9
Heating Capacity	kW	54,5	65,7	74,5	85,1	96,6	108
Total power input	kW	12,6	15,9	17,6	20,2	22,1	25,4
Total COP	-	7,67	7,31	7,54	7,45	7,77	7,56
Water flow rate user side	l/h	7333	8735	9982	11357	13019	14474
Pressure drop, user side	kPa	27	36	36	35	27	34
Water flow DHW side	l/h	9418	11336	12861	14684	16694	18668
Pressure drop DHW side	kPa	42	58	57	56	43	54
Heating mode (3)							
Heating Capacity	kW	59,4	71,5	81,1	92,4	105	118
Total power input	kW	12,8	16,2	17,8	20,5	22,4	25,6
COP	-	4,65	4,41	4,56	4,50	4,68	4,59
Water flow rate user side	l/h	10253	12322	13994	15941	18139	20315
Pressure drop, user side	kPa	48	67	67	65	50	63
Water flow rate source side	l/h	8164	9694	11093	12594	14447	16114
Pressure drop, source side	kPa	31	43	33	42	33	40
General Data							
FLA Maximum absorbed current	A	30	37	40	46	50	61
LRA Inrush current (without accessories)	A	111	156	157	164	176	203
LRA Inrush current (with softstarter)	A	73	83	102	107	117	137
n° of scroll compressor/ circuits	-	2/1	2/1	2/1	2/1	2/1	2/1
Sound power level (4)	dB(A)	72	72	73	73	74	76
Weight with pump and tank	kg	410	420	450	460	490	510

(1) Water temperature - user side 12/7°C, water temperature - dissipation side 15/30 °C (14511:2011)
(2) Water temperature - user side 12/7°C, water temperature - recovery side 40/45 °C
(3) Water temperature - user side 40/45°C, water temperature - dissipation side 15/10 °C (14511:2011)
(4) Sound power level measured according to UNI EN ISO 9614



Rated technical data of models for 2-pipe systems + DHW

LEP M		112	132	142	144	162	164
Cooling mode (1)							
Cooling Capacity	kW	122	139	159	158	177	178
Total power input	kW	20,8	24,1	27,9	28,8	32,0	31,8
EER	-	5,83	5,76	5,69	5,49	5,53	5,60
ESEER	-	6,48	6,43	6,17	6,09	6,17	6,24
Water flow rate user side	l/h	20958	23908	27403	27299	30542	30731
Pressure drop, user side	kPa	41	50	48	47	52	52
Water flow rate source side	l/h	8124	9280	10658	10673	11925	11979
Pressure drop, source side	kPa	7	9	8	8	9	9
Operation of the cooling and heating in total heat recovery (2)							
Cooling capacity	kW	102	116	133	134	149	149
Heating Capacity	kW	130	148	170	172	191	192
Total power input	kW	29,5	34,4	39,2	39,9	44,3	44,4
Total COP	-	7,83	7,67	7,75	7,66	7,67	7,67
Water flow rate user side	l/h	17509	19938	22954	23050	25651	25738
Pressure drop, user side	kPa	30	36	35	35	38	38
Water flow DHW side	l/h	22418	25636	29462	29671	33006	33122
Pressure drop DHW side	kPa	47	57	54	55	60	60
Heating mode (3)							
Heating Capacity	kW	141	161	185	187	208	208
Total power input	kW	29,8	34,7	39,5	40,3	44,7	45,0
COP	-	4,73	4,65	4,69	4,63	4,64	4,62
Water flow rate user side	l/h	24385	27855	32009	32243	35854	35982
Pressure drop, user side	kPa	54	66	63	63	70	69
Water flow rate source side	l/h	19466	22145	25486	25584	28482	28558
Pressure drop, source side	kPa	34	43	40	40	44	45
General Data							
FLA Maximum absorbed current	A	71	79	91	92	102	100
LRA Inrush current (without accessories)	A	275	244	289	197	298	211
LRA Inrush current (with softstarter)	A	210	182	224	140	233	152
n° of scroll compressor/ circuits	-	2/1	2/1	2/1	4/2	2/1	4/2
Sound power level (4)	dB(A)	76	77	77	80	77	80
Weight with pump and tank	kg	690	700	770	1010	830	1050

(1) Water temperature - user side 12/7°C, water temperature - dissipation side 15/30 °C (14511:2011)
(2) Water temperature - user side 12/7°C, water temperature - recovery side 40/45 °C
(3) Water temperature - user side 40/45°C, water temperature - dissipation side 15/10 °C (14511:2011)
(4) Sound power level measured according to UNI EN ISO 9614

Rated technical data of models for 2-pipe systems + DHW

LEP M		182	184	204	214	243	244
Cooling mode (1)							
Cooling Capacity	kW	211	206	223	243	272	284
Total power input	kW	37,0	35,4	38,5	41,5	47,0	46,7
EER	-	5,71	5,81	5,78	5,87	5,77	6,07
ESEER	-	6,29	6,33	6,46	6,44	6,37	6,62
Water flow rate user side	l/h	36435	35502	38427	41971	46839	48896
Pressure drop, user side	kPa	46	45	51	49	51	33
Water flow rate source side	l/h	14171	13777	14922	16268	18194	18881
Pressure drop, source side	kPa	8	8	9	9	9	5
Operation of the cooling and heating in total heat recovery (2)							
Cooling capacity	kW	177	172	186	204	230	238
Heating Capacity	kW	226	219	238	260	292	302
Total power input	kW	51,3	49,7	54,5	58,8	65,3	66,7
Total COP	-	7,86	7,87	7,79	7,88	7,98	8,09
Water flow rate user side	l/h	30513	29627	32115	35085	39581	40986
Pressure drop, user side	kPa	34	32	37	35	38	24
Water flow DHW side	l/h	39076	37935	41197	44897	50482	52229
Pressure drop DHW side	kPa	53	51	58	55	58	38
Heating mode (3)							
Heating Capacity	kW	246	239	259	283	317	327
Total power input	kW	51,9	50,1	55,1	59,3	65,9	67,3
COP	-	4,73	4,77	4,71	4,77	4,81	4,86
Water flow rate user side	l/h	42453	41353	44837	48891	54768	56606
Pressure drop, user side	kPa	61	59	68	64	67	44
Water flow rate source side	l/h	33846	33038	35730	39067	43844	45326
Pressure drop, source side	kPa	39	38	44	42	45	26
General Data							
FLA Maximum absorbed current	A	116	122	132	142	153	159
LRA Inrush current (without accessories)	A	361	250	321	328	336	301
LRA Inrush current (with softstarter)	A	278	184	256	263	271	239
n° of scroll compressor/ circuits	-	4/2	4/2	4/2	4/2	3/1	4/2
Sound power level (4)	dB(A)	78	81	81	81	81	82
Weight with pump and tank	kg	890	1130	1280	1350	1850	1840

(1) Water temperature - user side 12/7°C, water temperature - dissipation side 15/30 °C (14511:2011)
(2) Water temperature - user side 12/7°C, water temperature - recovery side 40/45 °C
(3) Water temperature - user side 40/45°C, water temperature - dissipation side 15/10 °C (14511:2011)
(4) Sound power level measured according to UNI EN ISO 9614



Rated technical data of models for 2-pipe systems + DHW

LEP M		283	284	314	344	374	424
Cooling mode (1)							
Cooling Capacity	kW	313	317	348	381	414	475
Total power input	kW	86,3	86,2	99,0	107	115	126
EER	-	5,70	5,77	5,51	5,57	5,63	5,9
ESEER	-	6,34	6,21	6,15	6,13	6,2	6,45
Water flow rate user side	l/h	53930	54637	60047	65714	71374	81840
Pressure drop, user side	kPa	39	40	48	47	46	48
Water flow rate source side	l/h	21010	21243	23495	25670	27842	31712
Pressure drop, source side	kPa	7	7	8	8	8	8
Operation of the cooling and heating in total heat recovery (2)							
Cooling capacity	kW	263	267	294	321	349	396
Heating Capacity	kW	336	340	378	411	446	508
Total power input	kW	76,6	77,3	88,1	95,1	102	118
Total COP	-	7,83	7,84	7,62	7,70	7,76	7,67
Water flow rate user side	l/h	45343	45905	50624	55270	60024	68143
Pressure drop, user side	kPa	29	29	35	34	34	34
Water flow DHW side	l/h	58202	58887	65356	71210	77195	87885
Pressure drop DHW side	kPa	45	46	56	54	53	54
Heating mode (3)							
Heating Capacity	kW	364	369	410	447	484	550
Total power input	kW	77,4	78,0	88,8	96,2	104	119
COP	-	4,71	4,73	4,61	4,64	4,66	4,63
Water flow rate user side	l/h	63082	63868	70853	77301	83657	95146
Pressure drop, user side	kPa	52	53	65	63	61	63
Water flow rate source side	l/h	50157	50846	56099	61287	66384	75351
Pressure drop, source side	kPa	32	34	41	39	39	40
General Data							
FLA Maximum absorbed current	A	174	182	204	218	232	281
LRA Inrush current (without accessories)	A	401	355	374	437	442	490
LRA Inrush current (with softstarter)	A	318	290	309	354	359	420
n° of scroll compressor/ circuits	-	3/1	4/2	4/2	4/2	4/2	4/2
Sound power level (4)	dB(A)	81	82	82	83	83	83
Weight with pump and tank	kg	1880	1940	2040	2110	2180	2380

(1) Water temperature - user side 12/7°C, water temperature - dissipation side 15/30 °C (14511:2011)
(2) Water temperature - user side 12/7°C, water temperature - recovery side 40/45 °C
(3) Water temperature - user side 40/45°C, water temperature - dissipation side 15/10 °C (14511:2011)
(4) Sound power level measured according to UNI EN ISO 9614

Rated technical data of models for 4-pipe systems

LEP P		42	52	62	72	82	92
Cooling mode (1)							
Cooling Capacity	kW	50,8	59,7	69,3	78,0	90,0	100
Total power input	kW	9,00	11,7	12,7	14,6	15,9	18,1
EER	-	5,64	5,12	5,46	5,34	5,68	5,56
ESEER	-	6,04	5,78	6,11	6,01	6,25	6,25
Water flow rate user side	l/h	8776	10330	11974	13485	15537	17337
Pressure drop, user side	kPa	37	49	50	48	38	48
Water flow rate source side	l/h	3414	4073	4677	5286	6044	6760
Pressure drop, source side	kPa	7	9	7	9	7	8
Operation of the cooling and heating in total heat recovery (2)							
Cooling capacity	kW	42,5	50,6	57,8	65,8	75,5	83,9
Heating Capacity	kW	54,5	65,7	74,4	85,1	96,6	108
Total power input	kW	12,6	15,9	17,5	20,2	22,1	25,4
Total COP	-	7,67	7,32	7,57	7,46	7,77	7,56
Water flow rate user side	l/h	7333	8735	9982	11357	13019	14474
Pressure drop, user side	kPa	117	102	95	89	87	123
Water flow DHW side	l/h	9418	11336	12861	14684	16694	18668
Pressure drop DHW side	kPa	93	116	122	100	100	104
Heating mode (3)							
Heating Capacity	kW	59,4	71,5	81,1	92,4	105	118
Total power input	kW	12,8	16,2	17,8	20,5	22,4	25,6
COP	-	4,65	4,41	4,56	4,5	4,68	4,59
Water flow rate user side	l/h	10253	12322	13994	15941	18139	20315
Pressure drop, user side	kPa	48	67	67	65	50	63
Water flow rate source side	l/h	8164	9694	11093	12594	14447	16114
Pressure drop, source side	kPa	31	43	33	42	33	40
General Data							
FLA Maximum absorbed current	A	30	37	40	46	50	61
LRA Inrush current (without accessories)	A	111	156	157	164	176	203
LRA Inrush current (with softstarter)	A	73	83	102	107	117	137
n° of scroll compressor/ circuits	-	2/1	2/1	2/1	2/1	2/1	2/1
Sound power level (4)	dB(A)	72	72	73	73	74	76
Weight with pump and tank	kg	410	420	450	460	490	510

(1) Water temperature - user side 12/7°C, water temperature - dissipation side 15/30 °C (14511:2011)
(2) Water temperature - user side 12/7°C, water temperature - recovery side 40/45 °C
(3) Water temperature - user side 40/45°C, water temperature - dissipation side 15/10 °C (14511:2011)
(4) Sound power level measured according to UNI EN ISO 9614



Rated technical data of models for 4-pipe systems

LEP P		112	132	142	144	162	164
Cooling mode (1)							
Cooling Capacity	kW	122	139	159	158	177	178
Total power input	kW	20,8	24,1	27,9	28,8	32,0	31,8
EER	-	5,83	5,76	5,69	5,49	5,53	5,60
ESEER	-	6,48	6,43	6,17	6,09	6,17	6,24
Water flow rate user side	l/h	20958	23908	27403	27299	30542	30731
Pressure drop, user side	kPa	41	50	48	47	52	52
Water flow rate source side	l/h	8124	9280	10658	10673	11925	11979
Pressure drop, source side	kPa	7	9	8	8	9	9
Operation of the cooling and heating in total heat recovery (2)							
Cooling capacity	kW	102	116	133	134	149	149
Heating Capacity	kW	130	148	170	172	191	192
Total power input	kW	29,5	34,4	39,2	39,9	44,2	44,4
Total COP	-	7,83	7,67	7,75	7,66	7,68	7,67
Water flow rate user side	l/h	17509	19938	22954	23050	25651	25738
Pressure drop, user side	kPa	131	119	112	112	101	101
Water flow DHW side	l/h	22418	25636	29462	29671	33006	33122
Pressure drop DHW side	kPa	103	140	131	113	102	101
Heating mode (3)							
Heating Capacity	kW	141	161	185	187	208	208
Total power input	kW	29,8	34,7	39,5	40,3	44,7	45
COP	-	4,73	4,65	4,69	4,63	4,64	4,62
Water flow rate user side	l/h	24385	27855	32009	32243	35854	35982
Pressure drop, user side	kPa	54	66	63	63	70	69
Water flow rate source side	l/h	19466	22145	25486	25584	28482	28558
Pressure drop, source side	kPa	34	43	40	40	44	45
General Data							
FLA Maximum absorbed current	A	71	79	91	92	102	100
LRA Inrush current (without accessories)	A	275	244	289	197	298	211
LRA Inrush current (with softstarter)	A	210	182	224	140	233	152
n° of scroll compressor/ circuits	-	2/1	2/1	2/1	4/2	2/1	4/2
Sound power level (4)	dB(A)	76	77	77	80	77	80
Weight with pump and tank	kg	690	700	770	1010	830	1050

(1) Water temperature - user side 12/7°C, water temperature - dissipation side 15/30 °C (14511:2011)
(2) Water temperature - user side 12/7°C, water temperature - recovery side 40/45 °C
(3) Water temperature - user side 40/45°C, water temperature - dissipation side 15/10 °C (14511:2011)
(4) Sound power level measured according to UNI EN ISO 9614

Rated technical data of models for 4-pipe systems

LEP P		182	184	204	214	243	244
Cooling mode (1)							
Cooling Capacity	kW	211	206	223	243	272	284
Total power input	kW	37,0	35,4	38,5	41,5	47,0	46,7
EER	-	5,71	5,81	5,78	5,87	5,77	6,07
ESEER	-	6,29	6,33	6,46	6,44	6,37	6,62
Water flow rate user side	l/h	36435	35502	38427	41971	46839	48896
Pressure drop, user side	kPa	46	45	51	49	51	33
Water flow rate source side	l/h	14171	13777	14922	16268	18194	18881
Pressure drop, source side	kPa	8	8	9	9	9	5
Operation of the cooling and heating in total heat recovery (2)							
Cooling capacity	kW	177	172	186	204	230	238
Heating Capacity	kW	226	219	238	260	292	302
Total power input	kW	51,3	49,7	54,5	58,8	65,3	66,7
Total COP	-	7,86	7,87	7,79	7,88	7,98	8,09
Water flow rate user side	l/h	30513	29627	32115	35085	39581	40986
Pressure drop, user side	kPa	90	94	126	120	108	117
Water flow DHW side	l/h	39076	37935	41197	44897	50482	52229
Pressure drop DHW side	kPa	94	99	114	108	123	143
Heating mode (3)							
Heating Capacity	kW	246	239	259	283	317	327
Total power input	kW	51,9	50,1	55,1	59,3	65,9	67,3
COP	-	4,73	4,77	4,71	4,77	4,81	4,86
Water flow rate user side	l/h	42453	41353	44837	48891	54768	56606
Pressure drop, user side	kPa	61	59	68	64	67	44
Water flow rate source side	l/h	33846	33038	35730	39067	43844	45326
Pressure drop, source side	kPa	39	38	44	42	45	26
General Data							
FLA Maximum absorbed current	A	116	122	132	142	153	159
LRA Inrush current (without accessories)	A	361	250	321	328	336	301
LRA Inrush current (with softstarter)	A	278	184	256	263	271	239
n° of scroll compressor/ circuits	-	2/1	4/2	4/2	4/2	3/1	4/2
Sound power level (4)	dB(A)	78	81	81	81	81	82
Weight with pump and tank	kg	890	1130	1280	1350	1850	1840

(1) Water temperature - user side 12/7°C, water temperature - dissipation side 15/30 °C (14511:2011)
(2) Water temperature - user side 12/7°C, water temperature - recovery side 40/45 °C
(3) Water temperature - user side 40/45°C, water temperature - dissipation side 15/10 °C (14511:2011)
(4) Sound power level measured according to UNI EN ISO 9614



Rated technical data of models for 4-pipe systems

LEP P		283	284	314	344	374	424
Cooling mode (1)							
Cooling Capacity	kW	313	317	348	381	414	475
Total power input	kW	55,0	54,9	63,3	68,4	73,5	80,5
EER	-	5,70	5,77	5,51	5,57	5,63	5,90
ESEER	-	6,34	6,21	6,15	6,13	6,20	6,45
Water flow rate user side	l/h	53930	54637	60047	65714	71374	81840
Pressure drop, user side	kPa	39	40	48	47	46	48
Water flow rate source side	l/h	21010	21243	23495	25670	27842	31712
Pressure drop, source side	kPa	7	7	8	8	8	8
Operation of the cooling and heating in total heat recovery (2)							
Cooling capacity	kW	263	267	294	321	349	396
Heating Capacity	kW	336	340	378	411	446	508
Total power input	kW	76,5	77,3	88,1	95,1	102	118
Total COP	-	7,83	7,85	7,63	7,7	7,76	7,68
Water flow rate user side	l/h	45343	45905	50624	55270	60024	68143
Pressure drop, user side	kPa	134	132	147	140	134	121
Water flow DHW side	l/h	58202	58887	65356	71210	77195	87885
Pressure drop DHW side	kPa	127	124	104	144	135	114
Heating mode (3)							
Heating Capacity	kW	364	369	410	447	484	550
Total power input	kW	77,4	78,0	88,8	96,2	104	119
COP	-	4,71	4,73	4,61	4,64	4,66	4,63
Water flow rate user side	l/h	63082	63868	70853	77301	83657	95146
Pressure drop, user side	kPa	52	53	65	63	61	63
Water flow rate source side	l/h	50157	50846	56099	61287	66384	75351
Pressure drop, source side	kPa	32	34	41	39	39	40
General Data							
FLA Maximum absorbed current	A	174	182	204	218	232	281
LRA Inrush current (without accessories)	A	401	355	374	437	442	490
LRA Inrush current (with softstarter)	A	318	290	309	354	359	420
n° of scroll compressor/ circuits	-	3/1	4/2	4/2	4/2	4/2	4/2
Sound power level (4)	dB(A)	81	82	82	83	83	83
Weight with pump and tank	kg	1880	1940	2040	2110	2180	2380

(1) Water temperature - user side 12/7°C, water temperature - dissipation side 15/30 °C (14511:2011)
(2) Water temperature - user side 12/7°C, water temperature - recovery side 40/45 °C
(3) Water temperature - user side 40/45°C, water temperature - dissipation side 15/10 °C (14511:2011)
(4) Sound power level measured according to UNI EN ISO 9614

Dimensional drawings

LEP 041 - 092

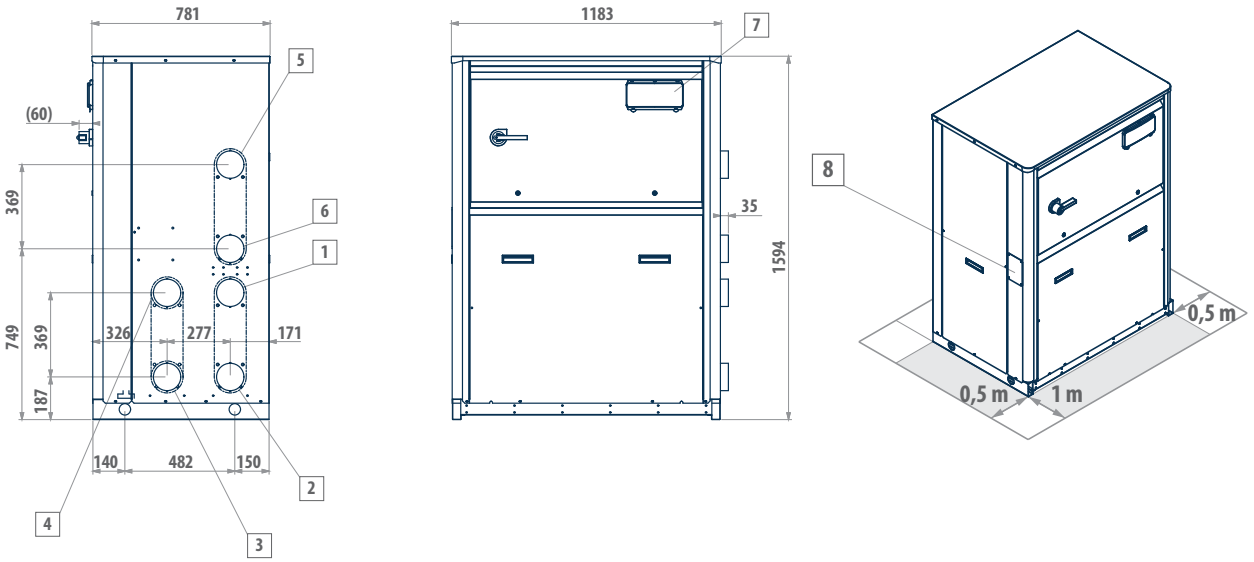

LEP 112 - 182

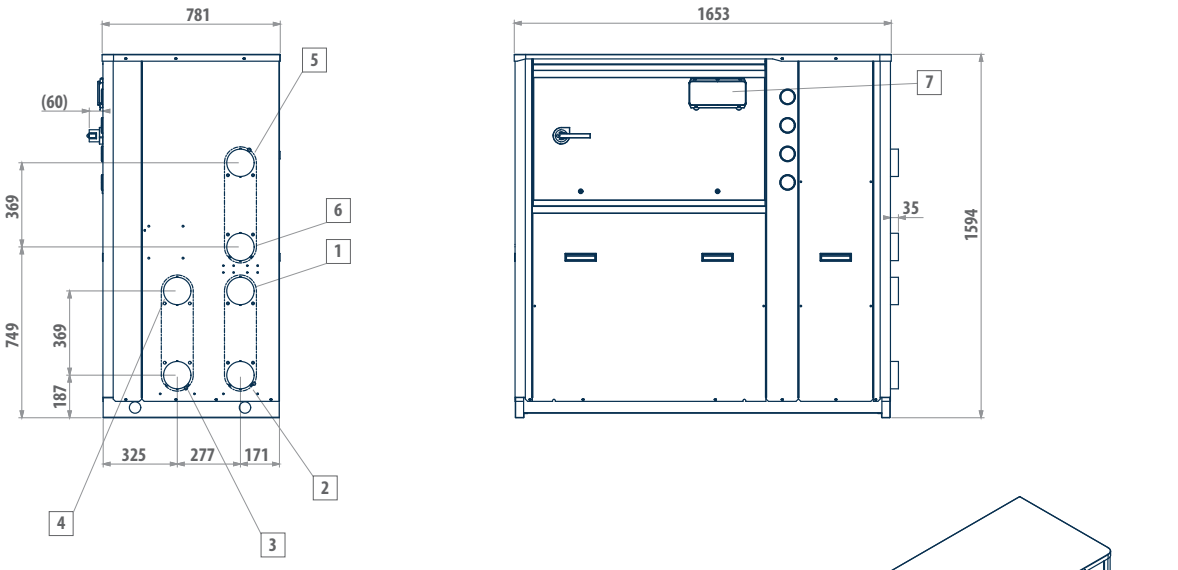

LEGEND	
1	User side - inlet (Victaulic 2½")
2	User side - outlet (Victaulic 2½")
3	DHW side - inlet (Victaulic 2½")
4	DHW side - outlet (Victaulic 2½")
5	Dissipation side - inlet (Victaulic 2½")
6	Dissipation side - outlet (Victaulic 2½")
7	User interface
8	Power supply input

Model	Version	
LEP 112	M-P	S-L
LEP 132	M-P	S-L
LEP 142	M-P	S-L
LEP 162	M-P	S-L
LEP 182	M-P	S-L



Dimensional drawings

LEP 144 - 184

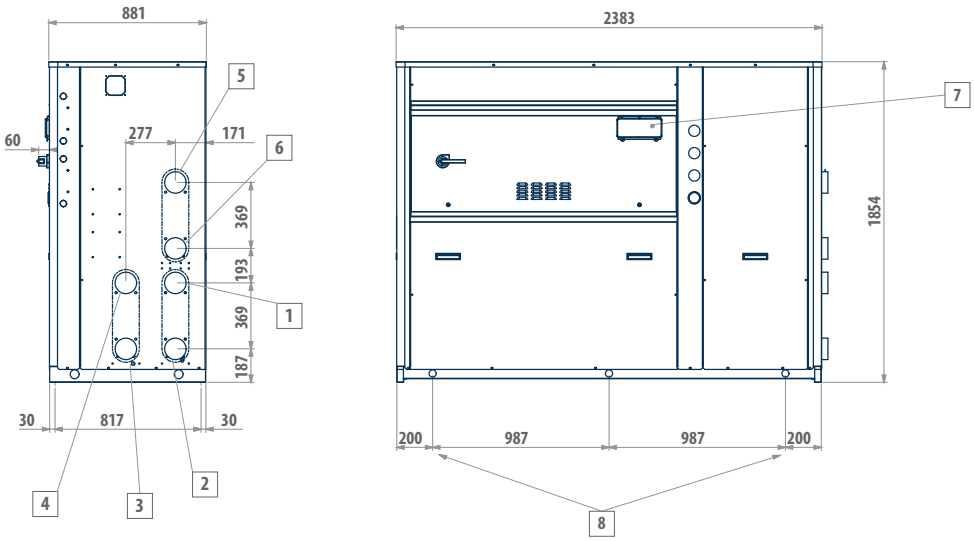

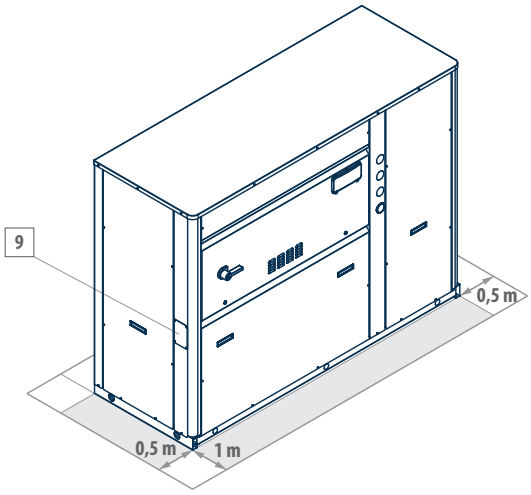

LEGEND	
1	User side - inlet (Victaulic 2½")
2	User side - outlet (Victaulic 2½")
3	DHW side - inlet (Victaulic 2½")
4	DHW side - outlet (Victaulic 2½")
5	Dissipation side - inlet (Victaulic 2½")
6	Dissipation side - outlet (Victaulic 2½")
7	User interface
8	Fastening points
9	Power supply input

Model	Version	
LEP 144	M-P	S-L
LEP 164	M-P	S-L
LEP 184	M-P	S-L

Dimensional drawings

LEP 204 - 214

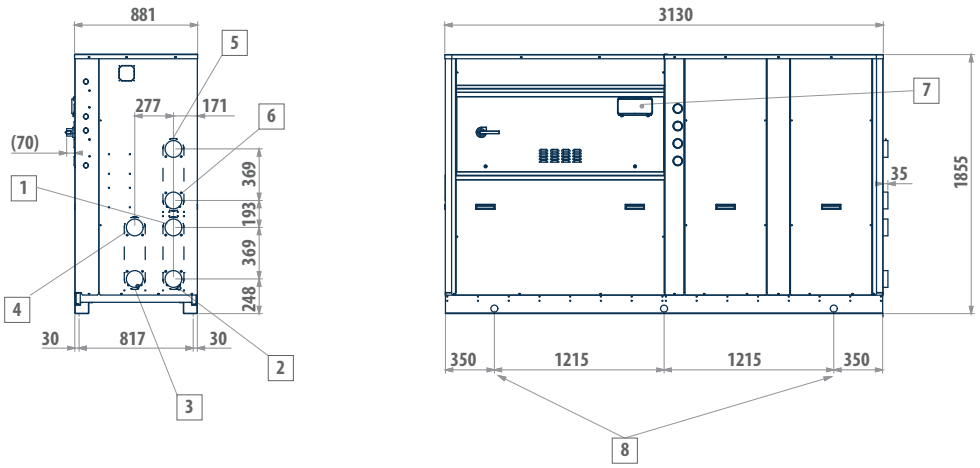

LEGEND	
1	User side - inlet (Victaulic 2½")
2	User side - outlet (Victaulic 2½")
3	DHW side - inlet (Victaulic 2½")
4	DHW side - outlet (Victaulic 2½")
5	Dissipation side - inlet (Victaulic 2½")
6	Dissipation side - outlet (Victaulic 2½")
7	User interface
8	Fastening points
9	Power supply input

Model	Version	
LEP 204	M-P	S-L
LEP 214	M-P	S-L



Dimensional drawings

LEP 243 - 424

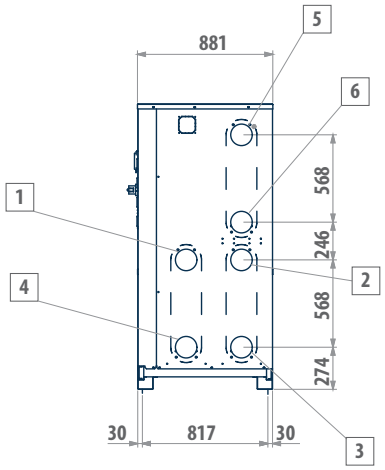

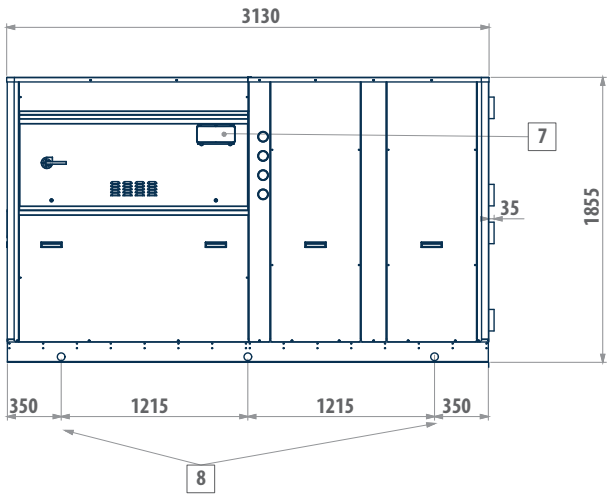

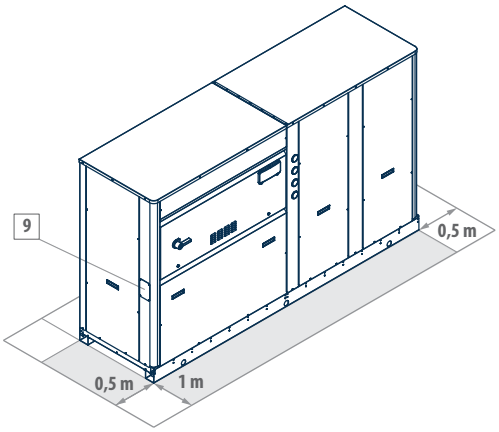

LEGEND	
1	User side - inlet (Victaulic 2½")
2	User side - outlet (Victaulic 2½")
3	DHW side - inlet (Victaulic 2½")
4	DHW side - outlet (Victaulic 2½")
5	Dissipation side - inlet (Victaulic 2½")
6	Dissipation side - outlet (Victaulic 2½")
7	User interface
8	Fastening points
9	Power supply input

Model	Version	
LEP 243	M-P	S-L
LEP 244	M-P	S-L
LEP 283	M-P	S-L
LEP 284	M-P	S-L
LEP 314	M-P	S-L
LEP 344	M-P	S-L
LEP 374	M-P	S-L
LEP 424	M-P	S-L

Galletti
AIR CONDITIONING



INTEGRATED SYSTEM SOLUTIONS AND CONTROLLERS

Introduction	p. 326
DHW KIT	p. 328
EVO SYSTEM	p. 330
STORAGE	p. 332

Galletti
AIR CONDITIONING



INTEGRATED SYSTEM SOLUTIONS AND CONTROLLERS

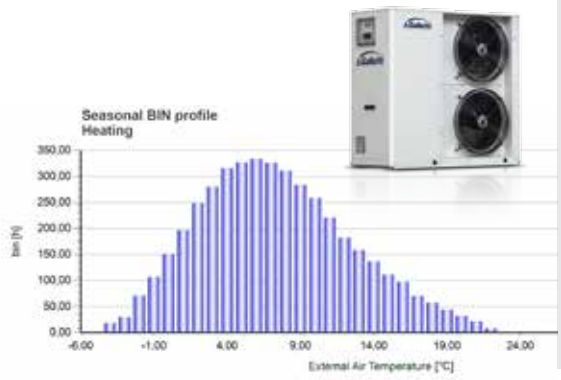

Energy saving

Galletti offers a ten-years long experience in air-conditioning systems at the service of professionals. The primary purpose is our customer's satisfaction in terms of comfort and energy savings.
An efficient system in its fundamental components (hydronic indoor units and heat pumps) cannot exclude an intellligent management. The system controls guarantee an optimal adjustment of the system, enhancing the strong points of single elements and combining their operation in order to reduce consumed energy to its lowest terms. Galletti is capable of managing systems with heat pumps (also multi-purpose ones) and possible auxiliary generators: by continuously monitoring the system operating conditions, the software automatically makes choices to guarantee an optimal level of comfort and to use the most efficient system at hand in every moment.

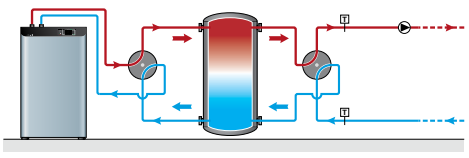

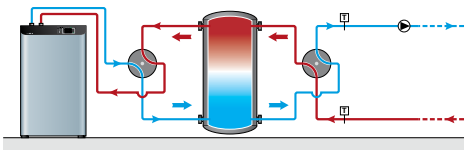

Stratification

Thermal accumulations are fundamental for the optimal management of systems, especially when there is a production of cold and hot water per each system and domestic hot water through different power units. A proper stratification of the water inside thermal storage guarantees considerable advantages in the management of the system. Specifically, keeping water at a higher temperature in the upper section and at a colder temperature in the lower section allows us to withdraw water for the system (even more importantly for domestic use) at the highest temperature available and to withdraw colder water, treated by the heat pump, from the lower section. In this way, the efficiency of the heat pump is maximized as well as the perception of comfort by the users.
In order to guarantee a correct stratification, Galletti offers thermal storage tanks equipped with labirinth diffusers to produce domestic hot water. For inertial accumulations, Galletti offers a double 4-way valve solution to allow the system to send hot water to the upper section and withdraw it from the same section during winter, switching the flow and its withdrawal during summer.

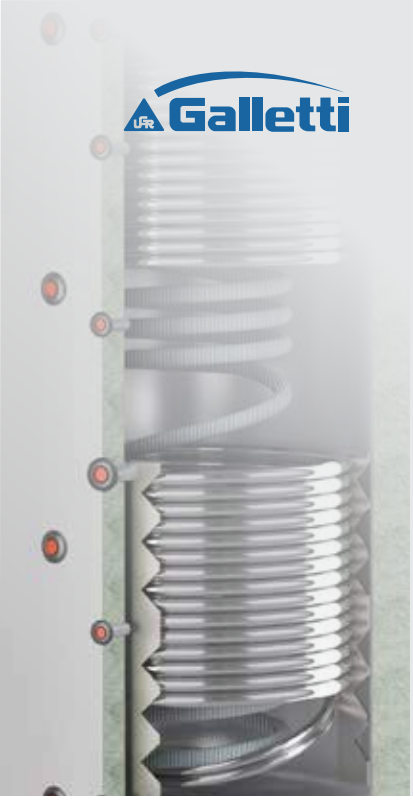

Thermal inertia in multi-purpose systems

Multi-purpose systems require particular attention when being designed. A fundamental element is the tank used for the production of domestic hot water. Galletti chose the solution "thermal storage tank of technical water" and "rapid" production of DHW through external plate heat exchanger or internal coil. In this way, it is possible to optimize the thermal exchange of the heat pump guaranteeing a better thermal exchange also in terms of stratification and, at the same time, eliminating the need of anti-legionella cycles since domestic hot water is not stored.
The collaboration with Cordivari, leader company in the tank field, led to the development of a range specifically created to operate with multi-purpose units in residential areas.
In this way, maximum comfort can be guaranteed to the end user, designers and technicians as well as the safety of an optimal system from every point of view.

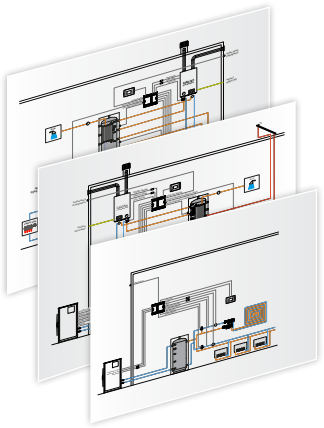

Flexibility

The controls and the system accessories offer the necessary tools for designers and technicians to develop a cutting edge system for the specific requests of their customers. The great flexibility of the Galletti's offer allows a management of systems with heat pumps with external 3-way valves for the production of hot and cold water for the system or domestic hot water, multi-purpose heat pumps with total recovery, tanks, pumps, valves, auxiliary power units and radiant systems.
Through the system controls and the available accessories, Galletti puts its experience in air-conditioning systems by providing a mix of solutions able to offer a reliable and suitable systems to its end user .



In-house software development

Constant improvement is at the bottom of the management softwares developed in Galletti's Technical Department. The offered adjustment is perfectly integrated with catalogued heat pumps by using a serial type communication on RS485 network or through potential no-voltage contacts.
The possibility to use different modes of communication together with the complete control of management dynamics makes Galletti's offer versatile and optimal not only for single products but also for different systems' solutions.

Integrated DHW production system kit for heat pumps

DHW KIT





3-way external valve management



DHW/Cold/ hot water production

PLUS

- Complete kit to simplify the system set-up
- Single interface for managing air conditioning and producing DHW
- Wide LCD display for a comfortable reading of all the operating parameters

A single command for the complete management of the hydo-thermal-sanitary system.

The need to use a single heat power unit for summer and winter air conditioning as well as the production of domestic hot water, keeping, at the same time, low the cost of the system, led us to develop DHW KIT. Developed to be linked to every Galletti's heat pump equipped with an adequate operating range (as the series MPI DC), it is composed of a remote control panel for the complete management of the system MYCHILLER DHW – and of a deviating three-way valve especially developed and measured for this use. MYCHILLER DHW uses the Modbus protocol on RS485 network to control the status of the connected unit and, according to the requests coming from the system, it modifies the operating mode and the production temperature of water.
A temperature sensor connected to the controler allows to measure the thermal level of water in the thermal storage tank and to activate the production process of DHW, according to this probe and in priority to the needs of the air conditioning.

- Switch to heat pump mode (if the unit is producing cold water for air-conditioning)
- Deviation of the three-way valve
- Setpoint modification to a settable level, compatible with the needs of domestic use
- Switch back to the previous operating mode once the request has been satisfied.

The production of domestic hot water through heat pumps requires the use of thermal storage tanks specifically developed for this operation, as the ones belonging to Galletti's TP and TS series, in order to guarantee a complete separation between technical water circulating in the system and the domestic water coming from the distribution network.
MYCHILLER DHW can also manage an integrative electrical resistance to install in the thermal storage tank, which is activated when external air temperature does not allow the heat pump to warm up the water up to a sufficient temperature.

APPLICATION EXAMPLES

System diagram with hydraulic circuit breaker and booster pump.

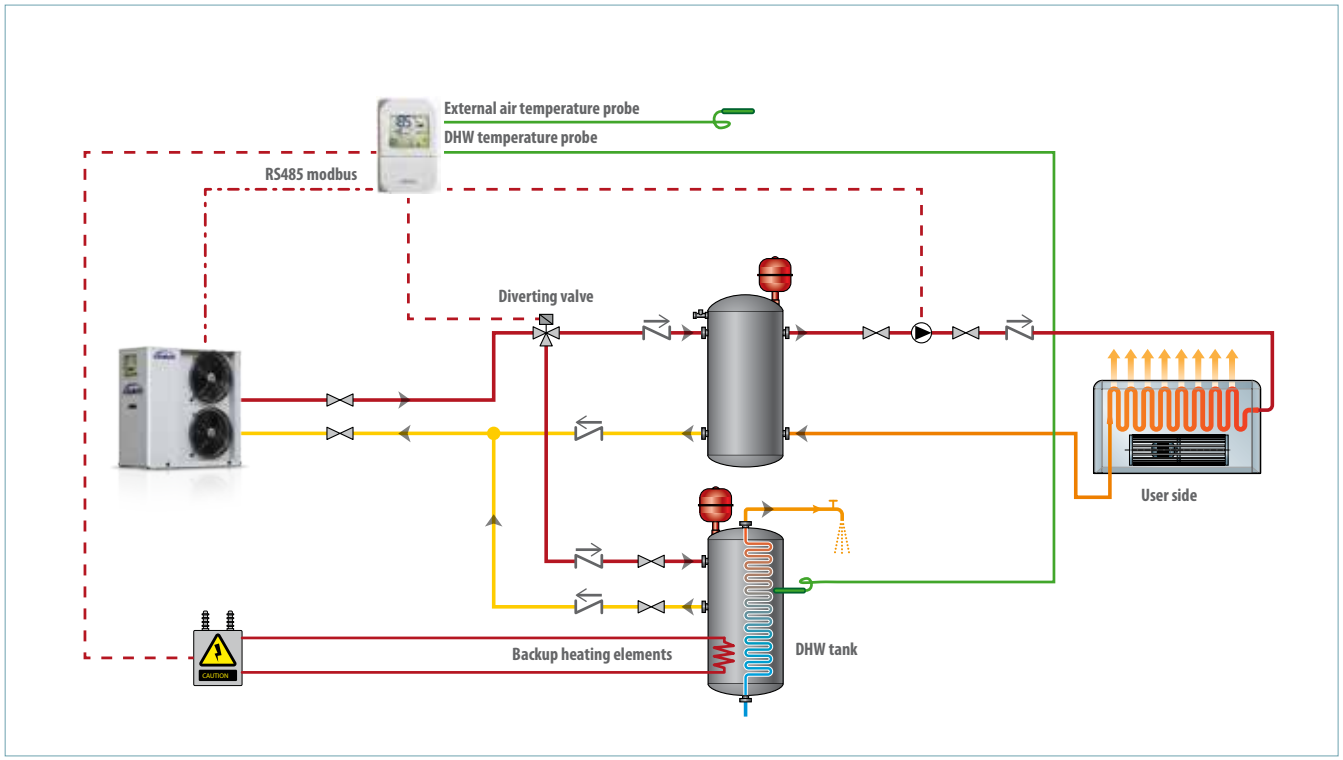

System diagram with inertial tank in line.

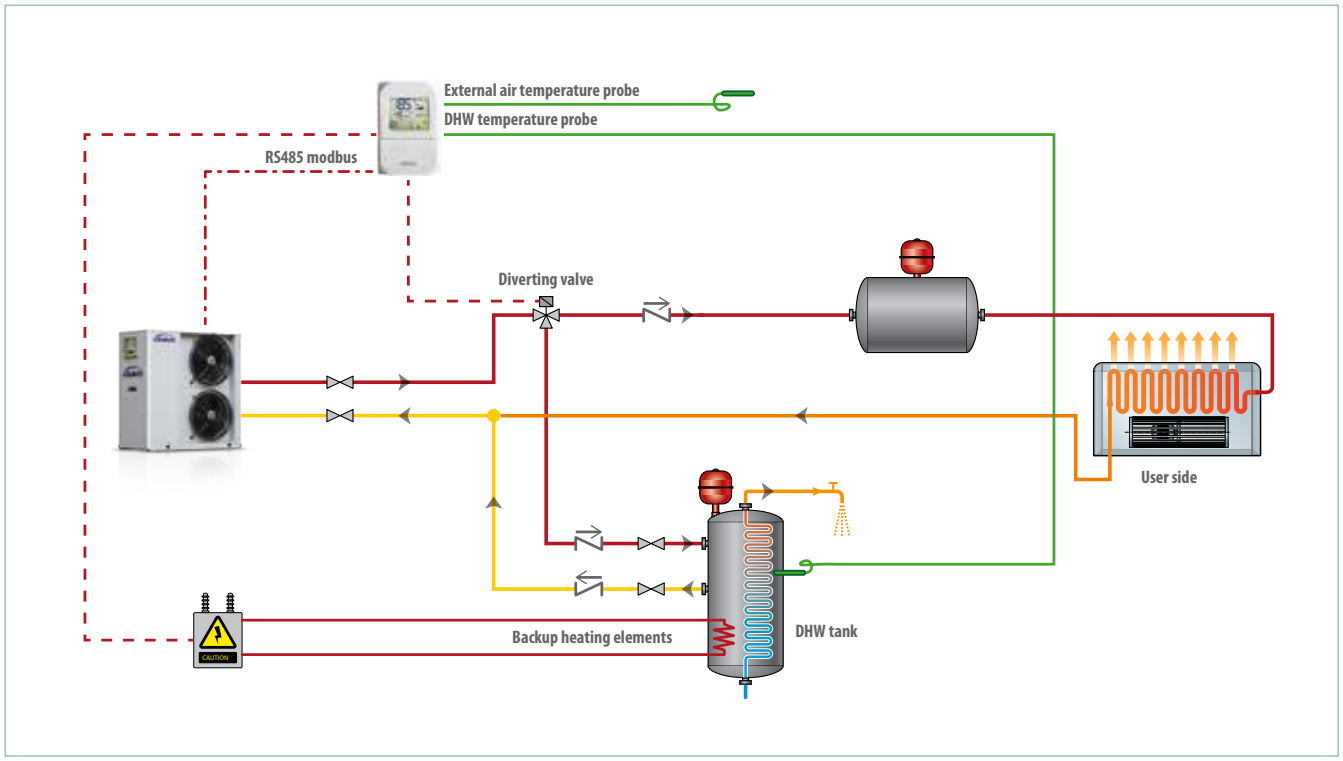

Electronic microprocessor controller for integrated system management

EVO SYSTEM

NEW PRODUCT





Management of dual systems | Selection of advantageous generator | Climatic curve management | Communication with Ergo | Dew point check | Derivative intervention logic

Intelligence and control at the service of the system

Comfort, energy savings, intelligence, and control are only some of the factors that have contributed to the creation of this microprocessor controller. EVO SYSTEM meets the need to develop an efficient generation system, not only with regard to its basic components, but especially their integration.
The regulations in force have finally diverted attention away from the prompt functioning of the heat pump (for example, its performance at the nominal point) to its behaviour in the seasonal period. To accomplish this it is necessary to take into account the variation of external conditions and the building-specific requirements, any other generation systems present in the system, and especially the management by the regulating system.
Today, finally Galletti concentrates its expertise into a unique product that is able to manage the basic components of a generation system, thereby automatically and intelligently guaranteeing excellent comfort without worries for the user, with maximum energy savings.
The integrated and synergistic management of the system is distilled into one word: EVO SYSTEM.

PLUS

- Integrated management of dual systems
- Selection of the most advantageous generator
- Communication with Ergo
- Dew point check

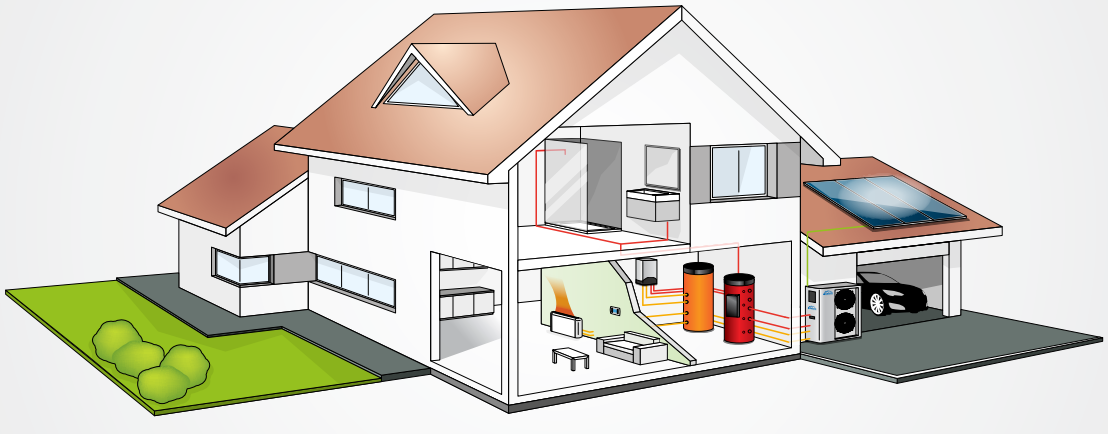



MAIN FUNCTIONS

Universal controller

The decision to set communication by means of clean contacts and analog outputs 0 – 10 V is based on a logic of flexibility that serial communication would be unable to offer. Specifically, the controller can interface with Galletti's entire range of heat pumps, auxiliary generators such as boilers, enclosed fireplaces, biomass burners, valves, circulators, and modulating actuators of various types.

Dew point

The controller is able to evaluate the relative humidity of a room and automatically calculate the dew point. This calculation is used to adjust the outlet set point of a mixed branch: this ensures that the water that feeds the radiant emitters is at a temperature high enough to avoid any condensation of water vapour in the air.



Compensation

The sensors connected to the regulator make it possible to manage one or more climatic curves on the system's different branches. This function allows the system to be connected to different types of indoor units controlling modulating actuators such as mixing valves to manage different outlet temperatures. This function ensures energy savings and the optimal operation of the emitters in connection with the building's thermal load.

Intelligent management of the tanks

In heat pump systems or with multi-purpose system in which a further generator is present, the temperature in the tanks is managed in order to maximize the use of the heat pump, and the integration system is activated only if necessary.

Emergency actions

The call to the integration system is made sooner if defrosting is underway, according to an innovative derivative logic that is able to evaluate, according to the speed of change of the water buffer tank's temperature, the presence of an event outside of the project criteria or unusual thermal loads.

SYNERGY WITH SENECA

Seneca

The system can be evaluated in the design phase by means of Seneca, web-based software developed by Galletti's R&D department, which is able to take into account:

- the specific Galletti heat pump and its behaviour under the various conditions
- the exact location of installation, which is matched with the seasonal thermal loads based on the BINs method
- the envelope, evaluated through the energy signature.

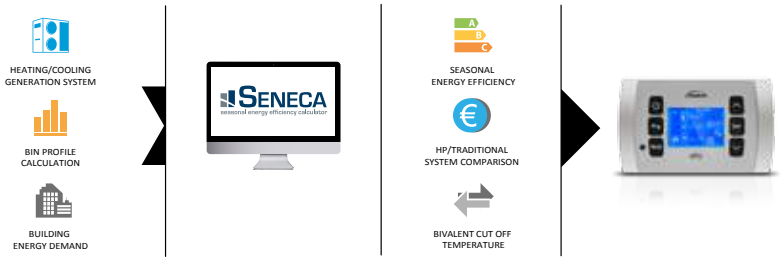

Cost effectiveness

Seneca's output is used in the EVO SYSTEM regulator to replicate, during actual operation, the optimal conditions simulated during the design phase. The constant monitoring of the outside temperature allows the controller to select the most advantageous system from an energy or economical point of view. The internal logics, combined with savings, ensure optimal comfort for the user.

Cut-off

In the dual systems, in which the heat pump power is combined with other heat sources, Seneca defines a cut-off temperature at which it is economically or energetically advantageous to use an alternative system to the heat pump.

INTEGRATION WITH ERGO

Communication

EVO SYSTEM makes it possible to manage the entire generation system from the user interface.
Furthermore, serial communication via the Modbus protocol makes the controller perfectly compatible with external supervisors such as ERGO.
This product completes Galletti's range of system controllers, guaranteeing the user integrated management of all the components of the air-conditioning system. Synergy, savings, and comfort with EVO SYSTEM.



ACCESSORIES

EYMCSUE	The humidity sensor is connected to the power board and is designed for insertion in the rear space of the user interface (in a dedicated recess). The relative humidity value is calculated from the absolute humidity measured by the sensor and the dry-bulb temperature measured by the air sensor that is already integrated in the user interface.

Thermal storage tank for the production of domestic hot water

RYT 300 - 800 l



Advanced technology in the accumulation of technical water for the production of domestic hot water

This range of products combines Galletti's solid experience in the operation of heat pumps and in the logics for managing multi-purpose systems with Cordivari's experience in developing tanks.
To maximize system efficiency, Galletti decided to give priority to the thermal storage tank logic (storage of technical water in the tank) over the boiler logic (storage of domestic hot water). In this manner it is not necessary to include the anti-Legionella cycle, which is normally executed by means of a thermal shock (which implies a loss in the system's efficiency) or a chemical treatment.
The range consists of two product lines, the first product line includes thermal storage tanks with a stainless steel coil for the immediate production of domestic hot water and the second one consists of thermal storage tanks combined with an external plate exchanger and mixing valve for the production of domestic hot water at a fixed temperature.

PLUS

- ✔ Labirinth diffuser (patented) for an optimal stratification.
- ✔ Increased exchange surfaces for the production of DHW at an optimal temperature
- ✔ External insulation in polyurethane foam or high-thickness polyester
- ✔ No need of anti-legionella cycles
- ✔ Presence of traps for probes at different height levels.

RYTN / RYTNSH

Thermal storage tanks with a stainless steel coil for the immediate production of domestic hot water.

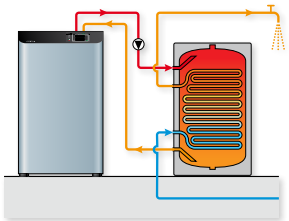

RYTP / RYTPSH

Thermal storage tanks combined with an external plate exchanger for the immediate production of domestic hot water.

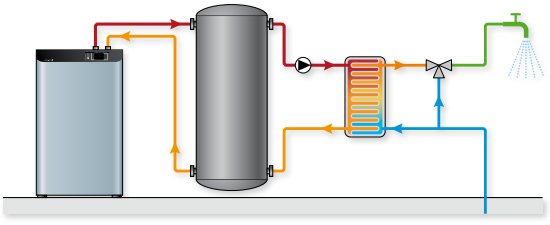

ACCESSORIES: DIP HEATING ELEMENTS

	RYR02M 2 kW - 220 kW single-phase	RYR03M 3 kW - 220 kW single-phase	RYR06T 6 kW - 400 kW three-phase	RYR12T 6 kW - 400 kW three-phase
300 l	✔	✔	-	-
500 - 600 l	✔	✔	✔	-
800 l	✔	✔	✔	✔



AVAILABLE VERSIONS



RYTN

RYTN storage tanks are designed to store heating system water. Domestic water is made to pass inside a stainless steel corrugated coil.
Inside the thermal storage tank , in the connections used for the heat pumps, there is a labirinth diffuser (patented): this element guarantees the maintenance of the stratification regardless of the joint used for the flow of technical water coming from the heat pump.

Capacity	Code	Net storage volume	Domestic water circuit volume	Surface area of corrugated coil	Weight
[l]		[l]	[l]	[m²]	[kg]
300	RYTN 300	302.0	7.2	3.5	62
600	RYTN 600	525.8	32.2	5.5	95
800	RYTN 800	760.0	45.5	7.8	120

Thermal storage tank		DHW coil
Pmax	Tmax	Pmax
3 bar	99° C	6 bar



RYTNSH

RYTNSH storage tanks are designed to store heating system water. Domestic water is made to pass inside a stainless steel corrugated coil.
They are also provided with additional charging coils to enable use of heat originating from solar thermal panels or other high temperature sources of heat such as, for example, fireplace heaters, biomass generators, etc.
Inside the thermal storage tank , in the connections used for the heat pumps, there is a labirinth diffuser (patented): this element guarantees the maintenance of the stratification regardless of the joint used for the flow of technical water coming from the heat pump.

Capacity	Code	Net storage volume	Domestic water circuit volume	Surface area of corrugated coil	Volume of lower fixed coil	Surface area of lower fixed coil	Volume of upper fixed coil	Surface area of upper fixed coil	Weight
[l]		[l]	[l]	[m²]	[l]	[m²]	[l]	[m²]	[kg]
300	RYTNSH 300	288.3	7.2	3.5	7.8	1.2	5.9	0.9	85
600	RYTNSH 600	501.8	32.2	5.5	13	2	8	1.25	132
800	RYTNSH 800	728	45.5	7.8	16.3	2.5	11.8	1.8	169

Thermal storage tank		DHW coil	Solar and high temperature coil	
Pmax	Tmax	Pmax	Pmax	Pmax
3 bar	99° C	6 bar	12 bar	110° C

RYTN / RYTNSH Rated technical data

RYTN 300 RYTNSH 300	P = 0 kW		P = 5 kW		P = 10 kW		P = 15 kW	
	Q (l/min)	V (l)	Q (l/min)	V (l)	Q (l/min)	V (l)	Q (l/min)	V (l)
DHW 10C°/45C° Initial T storage 55C°	10	118	10	142	10	166	10	191
	20	83	20	91	20	100	20	108
	30	48	30	51	30	54	30	57
DHW 10C°/45C° Initial T storage 50C°	10	96	10	116	10	135	10	155
	20	67	20	74	20	81	20	88
	30	39	30	42	30	44	30	47

RYTN 600 RYTNSH 600	P = 0 kW		P = 5 kW		P = 10 kW		P = 15 kW		P = 20 kW		P = 25 kW	
	Q (l/min)	V (l)	Q (l/min)	V (l)	Q (l/min)	V (l)	Q (l/min)	V (l)	Q (l/min)	V (l)	Q (l/min)	V (l)
DHW 10C°/45C° Initial T storage 55C°	10	293	10	353	10	413	10	473	10	533	10	593
	20	223	20	246	20	269	20	291	20	314	20	337
	30	153	30	163	30	174	30	184	30	195	30	205
DHW 10C°/45C° Initial T storage 50C°	10	240	10	289	10	338	10	387	10	436	10	485
	20	182	20	201	20	220	20	238	20	257	20	276
	30	125	30	134	30	142	30	151	30	159	30	168

RYTN 800 RYTNSH 800	P = 0 kW		P = 15 kW		P = 20 kW		P = 25 kW		P = 30 kW		P = 35 kW	
	Q (l/min)	V (l)	Q (l/min)	V (l)	Q (l/min)	V (l)	Q (l/min)	V (l)	Q (l/min)	V (l)	Q (l/min)	V (l)
DHW 10C°/45C° Initial T storage 55C°	10	469	10	757	10	853	10	949	10	1045	10	1141
	20	367	20	480	20	517	20	555	20	592	20	630
	30	266	30	320	30	339	30	357	30	375	30	393
DHW 10C°/45C° Initial T storage 50C°	10	384	10	619	10	698	10	777	10	855	10	934
	20	300	20	392	20	423	20	454	20	485	20	515
	30	218	30	262	30	277	30	292	30	307	30	322



RYTP

RYTP storage tanks are equipped with an external module that instantly heats domestic water by exploiting the heat stored in the puffer, ensuring hygiene and comfort as well as the possibility of regulating the outlet temperature.

The module consists of a stainless steel plate exchanger, an on/off pump and a 3-way valve for temperature-controlled pre-mixing on the exchanger inlet (primary side), which prevents excessively high temperatures in the exchanger itself while considerably reducing the risk of limescale build-up.

Capacity	Code	Net storage volume	Max power of DHW module	Weight
[l]		[l]	kW	[kg]
300	RYTP 300	286	120*	106
500	RYTP 500	505	120*	131
800	RYTP 800	803	120*	152

* =maximum power referring to a storage temperature of 80°C

Thermal storage tank		Stainless steel plate heat exchanger	
Pmax	Tmax	Pmax	Tmax
3 bar	99° C	6 bar	99° C



RYTPSH

RYTP storage tanks are equipped with an external module that instantly heats domestic water by exploiting the heat stored in the puffer, ensuring hygiene and comfort as well as the possibility of regulating the outlet temperature.

The module consists of a stainless steel plate exchanger, an on/off pump and a 3-way valve for temperature-controlled pre-mixing on the exchanger inlet (primary side), which prevents excessively high temperatures in the exchanger itself while considerably reducing the risk of limescale build-up.

They are also provided with additional charging coils to enable use of heat originating from solar thermal panels or other high temperature sources of heat such as, for example, fireplace heaters, biomass generators, etc.

Capacity	Code	Net storage volume	Max power of DHW module	Volume of lower fixed coil	Surface area of lower fixed coil	Volume of upper fixed coil	Surface area of upper fixed coil	Weight
[l]		[l]	kW	[l]	[m²]	[l]	[m²]	[kg]
300	RYTPSH 300	278.1	120*	7.6	1.2	4.4	0.7	125
500	RYTPSH 500	483.1	120*	13.5	2.1	6.5	1.25	170
800	RYTPSH 800	774.9	120*	16.3	2.5	13.5	1.8	202

* =maximum power referring to a storage temperature of 80°C

Thermal storage tank		Solar and high temperature coil		Stainless steel plate heat exchanger	
Pmax	Tmax	Pmax	Tmax	Pmax	Tmax
3 bar	99° C	12 bar	110° C	6 bar	99° C

RYTP / RYTPSH Rated technical data

RYTP 300 RYTNSH 300	P = 0 kW		P = 5 kW		P = 10 kW		P = 15 kW		P = 20 kW		P = 25 kW	
	Q (l/min)	V (l)	Q (l/min)	V (l)	Q (l/min)	V (l)	Q (l/min)	V (l)	Q (l/min)	V (l)	Q (l/min)	V (l)
DHW 10C°/45C° Initial T storage 55C°	10	334	10	420	10	566	10	866	10	1846	10	Infinite
	20	334	20	372	20	420	20	482	20	566	20	684
	26,3	334*	26,3	362*	26,3	396*	26,3	436*	26,3	485*	26,3	547*
DHW 10C°/45C° Initial T storage 50C°	10	264	10	332	10	447	10	684	10	1459	10	Infinite
	20	264	20	294	20	332	20	381	20	447	20	541
	21	264	21	293	21	328	21	373	21	433	21	515

RYTP 500 RYTNSH 500	P = 0 kW		P = 15 kW		P = 20 kW		P = 25 kW		P = 30 kW		P = 35 kW	
	Q (l/min)	V (l)	Q (l/min)	V (l)	Q (l/min)	V (l)	Q (l/min)	V (l)	Q (l/min)	V (l)	Q (l/min)	V (l)
DHW 10C°/45C° Initial T storage 55C°	10	557	10	1444	10	3078	10	Infinite	10	Infinite	10	Infinite
	20	557	20	804	20	943	20	1141	20	1444	20	1966
	26,3	557	26,3	727	26,3	809	26,3	912	26,3	1045	26,3	1224
DHW 10C°/45C° Initial T storage 50C°	10	441	10	1143	10	2437	10	Infinite	10	Infinite	10	Infinite
	20	441	20	636	20	747	20	904	20	1143	20	1556
	21	441	21	623	21	723	21	861	21	1063	21	1389

RYTP 800 RYTNSH 800	P = 0 kW		P = 15 kW		P = 20 kW		P = 25 kW		P = 30 kW		P = 35 kW	
	Q (l/min)	V (l)	Q (l/min)	V (l)	Q (l/min)	V (l)	Q (l/min)	V (l)	Q (l/min)	V (l)	Q (l/min)	V (l)
DHW 10C°/45C° Initial T storage 55C°	10	891	10	2310	10	4924	10	Infinite	10	Infinite	10	Infinite
	20	891	20	1286	20	1509	20	1825	20	231	20	3145
	26,3	891	26,3	1163	26,3	1294	26,3	1459	26,3	1672	26,3	1958
DHW 10C°/45C° Initial T storage 50C°	10	705	10	1828	10	3896	10	Infinite	10	Infinite	10	Infinite
	20	705	20	1018	20	1194	20	1444	20	1828	20	2488
	21	705	21	996	21	1156	21	1376	21	1699	21	2221

Q = flow rate of domestic hot water withdrawn from the coil in l/min
P = power in kW of the connected heat pump under the conditions considered (e.g. outdoor T)
V = maximum quantity of DHW that can be produced under the specified conditions
* DHW outlet temperature 42.6 °C
** withdrawal data refer to the sole use of the heat pump and not to the solar thermal or other high-temperature sources.

The dimensional data given herein are approximate.
As part of its commitment to improving products, Galletti S.p.A. reserves the right to introduce changes to technical and/or price list data without notice.
Due to printing, the colours of the products that appear in this document may differ from the actual colours.
All copying, even partial, of this document is strictly forbidden.

VM66000387-01

Galletti S.p.A.

Via L.Romagnoli, 12/a | 40010 Bentivoglio (BO) ITALY

T +39 051 8908111 | F +39 051 8908122/3

info@galletti.it | www.galletti.com